INSTRUCTION MANUAL

MODEL 160

DIGITAL MULTIMETER

AND MODEL 163
DIGITAL VOLTMETER

KEITHLEY INSTRUMENTS

WARRANTY

We warrant each of our products to be free from defects in material and workmanship. Our obligation under this warranty is to repair or replace any instrument or part thereof which, within a year after shipment, proves defective upon examination. We will pay domestic surface freight costs.

To exercise this warranty, call your local field representative or the Cleveland factory, DDD 216-248-0400. You will be given assistance and shipping instructions.

REPAIRS AND RECALIBRATION

Keithley Instruments maintains a complete repair service and standards laboratory in Cleveland, and has an authorized field repair facility in Los Angeles and in all countries outside the United States having Keithley field representatives.

To insure prompt repair or recalibration service, please contact your local field representative or the plant directly before returning the instrument.

Estimates for repairs, normal recalibrations, and calibrations traceable to the National Bureau of Standards are available upon request.

CONTENTS

Section	Page
SPECIFICATIONS	ii
1. GENERAL DESCRIPTION	1
2. OPERATION	4
3. CIRCUIT DESCRIPTION	10
4. ACCESSORIES	16
5. SERVICING	18
6. CALIBRATION	21
7. REPLACEABLE PARTS	25
SCHEMATICS	49

SPECIFICATIONS

AS A DC VOLTMETER

RANGE: ±1 microvolt per digit to ±1000 volts full scale in seven decade ranges. 100% overranging on all except the 1000-volt range.

ACCURACY: ±0.1% of reading, ±1 digit on all ranges.

INPUT RESISTANCE: 10 megohms on the 10-millivolt and higher ranges, 1 megohm on the 1-millivolt range.

AC REJECTION:

NMRR: Greater than 80 dB above one digit for a voltage of line frequency or twice line frequency on the most sensitive range, decreasing to 60 dB on the 100-millivolt and higher ranges. 1000 volts peak-to-peak maximum.

CMRR: Greater than 120 dB above one digit at dc and 40 to 100 Hz ac. 500 volts dc, 100 volts peak-to-peak ac maximum.

SETTLING TIME: Less than 2 seconds to rated accuracy.

MAXIMUM OVERLOAD: 1000 volts continuous input on 1-volt to 1000-volt ranges. 1000 volts momentary, 300 volts continuous on lower ranges.

AS A DC AMMETER: (Model 160 only)

RANGE: ±0.1 nanoampere per digit to ±1 ampere full scale in eight decade ranges. 100% overranging on all ranges.

ACCURACY: ±0.2% of reading, ±1 digit on the 100-nanoampere to 10-milliampere ranges, ±0.3% of reading, ±1 digit on the 0.1 and 1-ampere ranges.

INPUT RESISTANCE: 100 kilohms on the 0.1-microampere range, decreasing to 0.1 ohm on the 100-milliampere and 1-ampere ranges.

NMRR: 60 dB above one digit for a current of line frequency or twice line frequency.

MAXIMUM OVERLOAD: 50 times full scale continuous on all ranges up to a maximum of 3 amperes.

AS AN OHMMETER: (Model 160 only)

RANGE: 0.1 ohm per digit to 1000 megohms full scale in eight decade ranges. 100% overranging on all ranges.

ACCURACY: ±0.3% of reading, ±1 digit, ±0.1 ohm on the 100-ohm to 1-megohm ranges, decreasing to ±10% on the 100-megohm range. The 1000-megohm range is intended for relative resistance measurements only (±50%).

VOLTAGE ACROSS UNKNOWN: 100 millivolts at full scale 1.5 volts maximum into an open circuit.

MAXIMUM OVERLOAD: 20 volts momentary, 1 volt continuous.

GENERAL

ANALOG OUTPUT: ±1 volt dc at up to 1 milliampere for full scale input, 100% overranging on all ranges except the 1000-volt range.

POLARITY: Automatic.

ZERO STABILITY: ±0.3 microvolt/°C, ±2 microvolts/day after 1-hour warm-up.

OFFSET CURRENT: Typically less than 10 picoamperes.

ACCURACY STABILITY: ±0.01%/°C (±0.06%/°C on ohms). Accuracy (rated at 23°C ambient after a 30-minute warm-up) is maintained for at least 6 months.

DISPLAY: 3 digits plus 1 overrange digit; polarity and overload indication; 2 readings per second.

ISOLATION: Circuit ground to chassis ground: greater than 100 megohms shunted by less than 0.02 microfarad. Circuit ground may be floated up to ±500 volts with respect to chassis ground in the voltage and current modes.

POWER: 105-125 or 210-250 volts (switch selected), 50 or 60 Hz, 20 watts.

SECTION 1. GENERAL DESCRIPTION

1-1. GENERAL.

a. The Keithley Model 160 is a completely solid-state, line operated multimeter with the accuracy and convenience of a digital display. It has seven d-c voltage ranges from 1 millivolt full scale to 1000 volts full scale with 100% overranging on every range except 1000 volts. The Model 160 also measures from 100 nanoamperes full scale to 1 ampere with 100% overranging on each range. The ohms ranges are from 100 ohms full scale to 1000 megohms also with 100% overranging.

b. The Keithley Model 163 is a Voltmeter-Only version of the Model 160 Digital Multimeter. It has all the main features of the Model 160 except the ammeter and ohmmeter functions are deleted.

c. With the use of Keithley Model 1601 AC/DC Probe, a-c measurements can be made from 0.1 volt to 250 volts rms over a span of 45 Hz to 45 kHz. A probe-mounted switch provides convenient selection of a-c or d-c operation without disconnecting the probe.

1-2. FEATURES.

a. Accuracy is ±0.1% ±1 digit on any voltage range.

b. Input is protected for ±1000 volts continuous input on 1-volt to 1000 volt ranges. Rated at ±300 volts continuous input on 1 millivolt range.

c. Zero stability is ±2 microvolts/day after one hour warmup.

d. Single RANGE Control is designated in convenient engineering units.

e. Circuit low to chassis ground isolation permits safe off-ground measurements up to ±500 volts.

f. Instrument operates from either 50 or 60 Hz, 117 or 234 volt power.

g. Convenient recorder output is ±1 volt at 1 milliampere.

h. Model 1602 Digital Output Kit provides optional BCD Output.

1-3. APPLICATIONS. The Model 160 is a general purpose instrument - used in Basic Research, Electronics Development, and Process Control.

1. In the Research Lab - When used with a suitable probe, transducer, or electronic circuit, Model 160 can be used to indicate digitally, volts, amps, or ohms, or through conversion, any physical parameter such as temperature, pressure, rpm, etc.

2. In Electronics Development Activity - Useable for basic electrical measurements of voltage, current, or resistance. Especially suited for in-circuit resistance measurements.

3. In Process Control Activity - Adaptable for OEM equipment where repetitive measurements are needed with analog or digital printout.

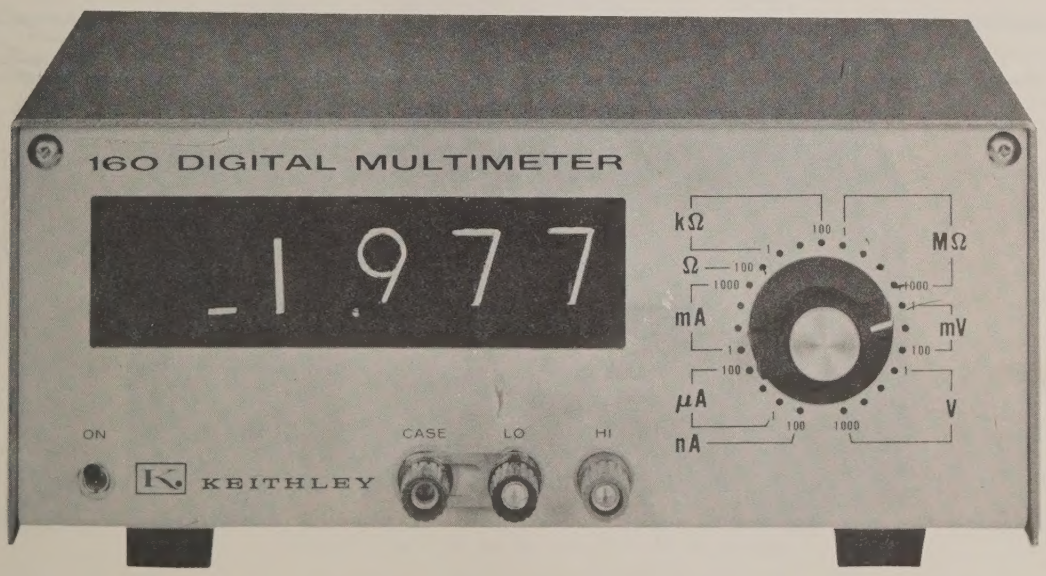

FIGURE 1. Model 160 Digital Multimeter - Front Panel

TABLE 1-2.

Front Panel Controls and Terminals. (Refer also to Figure 2). This Table briefly describes the function of the controls and terminals on the front panel. The paragraph indicated describes in detail the operation of the controls.

Control	Functional Description	Paragraph
Range Switch	Selects the full scale range and parameter to be measured (volts, amperes, or ohms).	2-2
Power Switch	Controls a-c line power to instrument (ON/OFF).	2-2
High Terminal (Red)	Connects input high to signal source.	2-1
Low Terminal (Black)	Connects input low to signal source. Circuit low is connected to chassis ground when the shorting link is connected between LO and CASE.	2-1
Case Terminal (Green)	Connection to case ground.	2-1
Polarity Indicator	Indicates polarity of the input signal.	2-2
Numerical Readout	Indicates magnitude of input signal.	2-8

TABLE 1-3.

Rear Panel Controls and Terminals. (Refer also to Figure 3). This Table briefly describes the function of the controls and terminals on the rear panel. The paragraph indicated describes in detail the operation of the controls.

Control	Functional Description	Paragraph
AC POWER Cord 50-60 Hz	Connects a-c line power to instrument.	2-4
117V-234V Switch	Sets instrument for either 117 or 234V a-c line power. NOTE: Earlier versions of the Model 160 or 163 have a rear panel switch that connects LO to CASE. When operating these versions the switch should be set to FLOAT when using the instruments for off-ground measurements.	2-3
ZERO Control	Screwdriver adjustment for fine zero.	2-3
OUTPUT Receptacle	Connects analog output to recording device. Output is ±1 volt d-c at up to 1 milliampere.	2-10
BCD OUTPUT	Cover plate for PRINTER/CONTROL connector furnished only with optional Model 1602 Digital Output Kit.	2-12

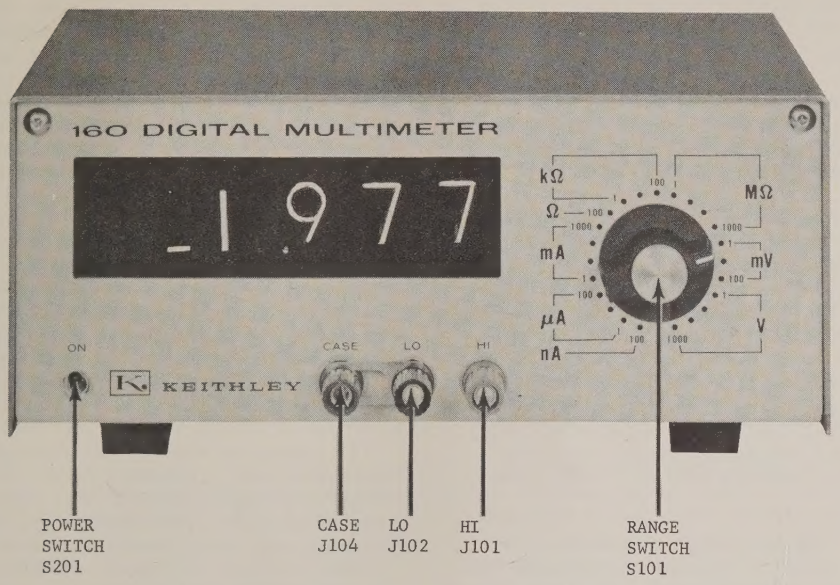

FIGURE 2. Model 160 Front Panel Controls and Terminals.

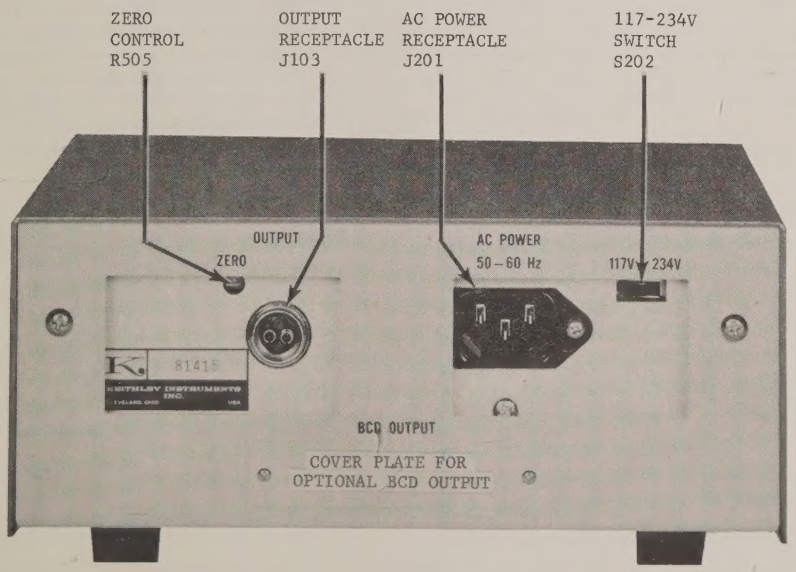

FIGURE 3. Model 160, 163 Rear Panel Controls and Terminals.

SECTION 2. OPERATION

2-1. INPUT CONNECTIONS.

a. Binding Post Terminals. Three binding posts are provided on the front panel for all input connections. The terminals are color coded as follows: Red = Input High, Black = Input Low, Green = Case ground.

b. Noise Considerations. The limit of resolution in voltage and current measurements is determined largely by the noise generated in the source. Stray low-level noise is present in some form in nearly all electrical circuits. The instrument does not distinguish between stray and signal voltages since it measures the net voltage. When using the 1 mV and 10 mV ranges, consider the presence of low-level electrical phenomena such as thermocouples (thermoelectric effect), flexing of coaxial cables (triboelectric effect), apparent residual charges on capacitors (dielectric absorption), and battery action of two terminals (galvanic action).

1. Thermal EMFs. Thermal emfs (thermoelectric potentials) are generated by thermal differences between two junctions of dissimilar metals. To minimize the drift caused by thermal emfs, use copper leads to connect the circuit to the instrument. The rear panel ZERO control can be used to buck out a constant thermal offset voltage if necessary. The Keithley accessory Model 1483 Low Thermal Connection Kit contains all necessary materials for making very low thermal copper crimp connections for minimizing thermal effects.

2. A-C Electric Fields. The presence of electric fields generated by power lines or other sources can have an effect on instrument operation. A-C voltages which are very large with respect to the full-scale range sensitivity could drive the a-c amplifier into saturation, thus producing an erroneous d-c output.

NOTE

The instrument provides attenuation of line frequency noise superimposed on an input signal. The a-c rejection is specified as follows:

NMRR: Greater than 80 dB above one digit for a voltage of line frequency or twice line frequency on the most sensitive range, decreasing to 60 dB on the 100-millivolt and higher ranges. 1000 volts peak-to-peak maximum.
CMRR: Greater than 120 dB above one digit at dc and 40 to 100 Hz ac. 500 volts dc, 100 volts peak-to-peak ac maximum.

Proper shielding as described in paragraph 2-1,c can minimize noise pick-up when the instrument is in the presence of large a-c fields or when very sensitive measurements are being made.

3. Magnetic Fields. The presence of strong magnetic fields can be a potential source of a-c noise. Magnetic flux lines which cut a conductor can produce large a-c noise especially at power line frequencies. The voltage induced due to magentic flux is proportional to the area enclosed by the circuit as well as the rate of change of magnetic flux. For example, the motion of a 3-inch diameter loop in the earth's magnetic field will induce a signal of several tenths of a microvolt. One way to minimize magnetic pickup is to arrange all wiring so that the loop area enclosed is as small as possible (such as twisting input leads). A second way to minimize magnetic pickup is to use shielding as described in paragraph 2-1, c.

c. Shielding.

1. Electric Fields. Shielding is usually necessary when the instrument is in the presence of very large a-c fields or when very sensitive measurements are being made. The shields of the measurement circuit and leads should be connected together to ground at only one point. This provides a "tree" configuration, which minimizes ground loops.

2. Magnetic Fields. Magnetic shielding is useful where very large magnetic fields are present. Shielding, which is available in the form of plates, foil or cables, can be used to shield the measuring circuit, the lead wires, or the instrument itself.

3. Other Considerations.

a) Voltmeter Measurements. Use shielded input leads when source resistances are greater than 1 Kilohm or when long input cables are used.

b) Current Measurements (Model 160 only). On the mA and μA current ranges, no special shielding precautions need be taken. However, on the 100 nanoampere range, shielded input leads are recommended.

c) Resistance Measurements (Model 160 only). Shielding of input leads and source are recommended for measurements on the 10 megohm through 1000 megohm ranges to prevent erroneous readings.

2-2. FRONT PANEL CONTROLS.

a. The Power Switch is an ON/OFF toggle switch that controls the a-c line power to the instrument.

NOTE

The Polarity Indicator serves as a pilot light.

b. The Range Switch is a convenient single T-handle knob that controls the full scale range of the parameter to be measured.

1. The range switch dial is marked in engineering units for voltage, current, and resistance, that is mV, V (Voltage), nA, μA, mA (Current) and Ω, kΩ, MΩ (Resistance). For each parameter, rotating the knob clockwise switches to the less sensitive range.

2. The voltage sectors of the Range Switch are designated in millivolts (mV) and volts (V) for full scale ranges from 1 millivolt to 1000 volts. A full stop at the 1000 volt range prevents inadvertant switching to the nanoampere ranges with clockwise switch rotation.

3. The resistance (ohms) sectors of the Range Switch (Model 160 only) are designated in ohms (Ω), kilohms (KΩ), and megohms (MΩ) for full scale ranges from 100 ohms to 1000 megohms.

4. The current (amperes) sectors of the Range Switch (Model 160 only) are designated in nanoamperes (nA), microamperes (μA), and milliamperes (mA), for full scale ranges from 100 nanoamperes to 1000 milliamperes.

c. Digital Display. The digital display uses three full digits plus an overrange "1".

2-3. REAR PANEL CONTROLS.

a. The 117-234 Volt Switch sets the instrument for either 117 or 234V rms a-c line power at 50 or 60 Hz.

NOTE

The front panel Power Switch is fused for both 117 and 234V operation. The fuses are installed on printed circuit board PC-254 and can be serviced by removing the top cover. The rear panel 117-234 Volt Switch connects either a 1/4 A (FU-33) or 1/2 A (FU-35) fuse for the selected line voltage.

b. The ZERO Control provides fine zero adjustment (usually required only for extreme changes of ambient temperature). This adjustment requires a screwdriver or similar tool.

2-4. PRELIMINARY OPERATING PROCEDURES.

a. Check the 117-234V Switch for the proper a-c line voltage.

b. Connect the line cord to either 117 or 234V a-c power line.

c. Set the Power Switch to ON. Allow a 30 minute warmup period for measurements on 10 mV and lower ranges.

2-5. VOLTMETER OPERATION.

a. The instrument can be conveniently used for d-c voltage measurements from ±1 microvolt to ±1000 volts by connecting the source to the front panel binding post terminals.

b. Overload Recovery. The instrument will recover from 300-volt overloads within five seconds on the 1 mV range. Up to 1000 volts peak may be applied momentarily on any range without damaging the instrument.

c. Input resistance is 10 megohms on the 10 millivolt and higher ranges, 1 megohm on the 1-millivolt range. For 10 mV and higher ranges, a 1000 ohm source resistance will introduce only 0.01% error. To maintain rated accuracy on the 1 mV range, the source resistance should not exceed 100 ohms.

d. The instrument low terminal can be floated ±500 volts above CASE ground for voltage measurements. Refer to paragraph 2-9 for complete instructions.

e. The Model 1601 AC/DC Probe permits convenient a-c voltage measurements from 0.1 volt to 250 volts rms over a span of 45 Hz to 45 kHz. A probe-mounted switch provides convenient selection of a-c or d-c operation without disconnecting the probe. Therefore, the probe may be permanently attached.

2-6. AMMETER OPERATION (Model 160 only).

a. The Model 160 can be conveniently used for d-c current measurements from ±0.1 nanoampere to ±1 ampere with 100% overranging on all ranges.

b. Connect the input terminals so as to place the Multimeter in series with the current to be measured.

c. The current accuracy is specified as ±0.2% of reading, ±1 digit on all ranges. Since the accuracy is specified at the input terminals, the loading effects as shown in Figure 4 should be considered. Refer also to Table 2-1 for resistance and sensitivity on each range.

d. The Model 160 low terminal can be floated ±500 volts above CASE ground for current measurements. Refer to paragraph 2-9 for complete instructions.

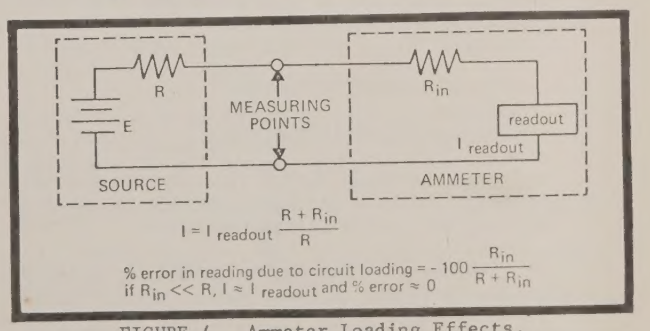

FIGURE 4. Ammeter Loading Effects.

TABLE 2-1.

Full Scale Range Amperes	Shunt Resistor Ohms (R_{in})	Sensitivity
1×10^{-7}	10^5	10 mV
1×10^{-6}	10^4	10 mV
1×10^{-5}	10^3	10 mV
1×10^{-4}	10^2	10 mV
1×10^{-3}	10	10 mV
1×10^{-2}	1	10 mV
1×10^{-1}	.1	10 mV
1	.1	100 mV

2-7. OHMMETER OPERATION (Model 160 only).

a. The Model 160 can be conveniently used for resistance measurements from 0.1 ohm to 2000 megohms by connecting the unknown resistor across the front panel binding post terminals.

b. Voltage across the unknown is 100 millivolts at full-scale with 1.5 volts maximum into an open circuit. Thus the current through the unknown is determined by dividing the 100 millivolts by the full scale resistance.

c. Maximum overload across the input terminals is 20 volts momentary and 1 volt continuous.

d. Accuracy is specified as shown in Table 2-2.

TABLE 2-2.

Full Scale Range	Decimal Point Position	Accuracy of Reading*
100 Ω	XX.X	±0.3% ±0.1 Ω
1 KΩ	.XXX	±0.3%
10 KΩ	X.XX	±0.3%
100 KΩ	XX.X	±0.3%
1 MΩ	.XXX	±0.3%
10 MΩ	X.XX	±0.3%
100 MΩ	XX.X	±10%
1000 MΩ	XXX	±50%
		*(±1 digit on all ranges.)

2-8. DIGITAL DISPLAY OPERATION.

a. Voltmeter Digital Display.

1. When the Range Switch is placed in Voltage positions 1 mV through 1000V, the digital display indicates the actual voltage measured.

2. The Range Switch is designated in convenient engineering units, mV (millivolts) and V (volts) with the decimal point automatically positioned in the display.

3. The full-scale voltage range is determined by the Range Switch. Refer to Table 2-3 for the full-scale voltage ranges available.

TABLE 2-3.

Full Scale Range Volts	Decimal Point Position	Range Switch Designation
1×10^{-3}	.XXX	mV
1×10^{-2}	X.XX	mV
1×10^{-1}	XX.X	mV
1	.XXX	V
10	X.XX	V
100	XX.X	V
1000	XXX	V

4. An overrange display up to a maximum of 1999 is provided by an overrange "1" indicator as shown in Table 2-4.

NOTE

The maximum continuous input voltage is ±1000 volts on the 1000 volt range.

For an input greater than 1999, all digits will be blanked except the overrange "1" indicator. The polarity indicator will remain lighted indicating the correct polarity. To remove an overload condition, change the Range Switch to a less sensitive position or decrease the input signal magnitude.

TABLE 2-4.

Input Volts	Digital Readout	Range Switch Designation
1.999×10^{-3}	1.999	mV
1.999×10^{-2}	19.99	mV
1.999×10^{-1}	199.9	mV
1.999	1.999	V
19.99	19.99	V
199.9	199.9	V
1000	1000	V

b. Ammeter Digital Display (Model 160 only).

1. When the Range Switch is placed in Amperes positions 100 nA through 1000 mA, the Multimeter digital display indicates the voltage across a calibrated, self-contained resistor. The Range Switch automatically selects the calibrated range resistor for current measurements from 1×10^{-7} to 1 ampere full scale.

2. The Range Switch is designated in convenient engineering units, nA (nanoamperes), μA (microamperes) and mA (milliamperes) with the decimal point automatically positioned in the display.

3. The full-scale current is determined by the Range Switch. Refer to Table 2-5 for the full-scale current ranges available on the Model 160.

TABLE 2-5.

Full Scale Range Amperes	Decimal Point Position	Range Switch Designation
1×10^{-7}	XX.X	nA
1×10^{-6}	.XXX	μA
1×10^{-5}	X.XX	μA
1×10^{-4}	XX.X	μA
1×10^{-3}	.XXX	mA
1×10^{-2}	X.XX	mA
1×10^{-1}	XX.X	mA
1	XXX	mA

4. The overranging feature of the instrument permits 100% overrange with a 1999 maximum display using all four digits. An input greater than 1999 will cause a blanking of the three righthand readouts the same as for voltage measurements.

c. Ohmmeter Display (Model 160 only).

1. When the Range Switch is placed in Ohms positions 100 Ω through 1000 MΩ, the Multimeter digital display designates the voltage across the unknown resistor with a fixed current applied.

2. The Range Switch is designated in convenient engineering units, Ω (ohms), KΩ (kilohms) and MΩ (megohms) with the decimal point automatically positioned in the readout.

3. The full-scale resistance is determined by the Range Switch. Refer to Table 2-6 for the full-scale resistance ranges available on the Model 160.

TABLE 2-6.

Full Scale Range Ohms	Decimal Point Position	Range Switch Designation
1×10^{2}	XX.X	Ω
1×10^{3}	.XXX	KΩ
1×10^{4}	X.XX	KΩ
1×10^{5}	XX.X	KΩ
1×10^{6}	.XXX	MΩ
1×10^{7}	X.XX	MΩ
1×10^{8}	XX.X	MΩ
1×10^{9}	XXX	MΩ

4. The overranging feature of the instrument permits 100% overrange with a 1999 maximum display using all four digits. An input greater than 1999 will cause a blanking of the three righthand readouts the same as for voltage measurements.

2-9. FLOATING OPERATION.

a. The low terminal can be floated above CASE ground by removing the shorting link between the LO and CASE. Isolation from circuit ground to chassis ground is greater than 100 megohms shunted by less than 0.02 microfarad. Circuit ground may be floated up to ±500 volts with respect to chassis ground in the voltage and current modes.

b. When the instrument is used for off-ground voltage or current measurements, the low terminal is at floating potential. The instrument case ground should be connected to earth ground through the CASE TERMINAL on the front panel. The shorting link should be disconnected so that LO to CASE is floating.

2-10. ANALOG OUTPUT. The instrument has an analog output of ±1 volt (not inverting) at up to 1 milliampere for recording purposes. For off-ground operation, the analog ±1 volt OUTPUT should not be connected unless an external recorder is capable of floating at ±500 volts with greater than 100 megohms isolation as the Keithley Model 370 recorder.

2-11. ZERO ADJUSTMENTS.

a. Short the input terminals with a low thermal connection - preferably a short copper wire or clip leads.

b. Set the front panel Range Switch to the 1 mV range.

c. If the digital display does not indicate zero, use the rear panel ZERO Control to adjust the instrument. Zero is indicated by flashing ± polarity lights.

d. Set the Range Switch to voltage positions 1 mV to 1000V while checking the readout so that zero is indicated on all ranges.

NOTE

If there is an off zero reading on the 1 volt range, it will be necessary to adjust the CURRENT OFFSET ADJ on the underside of the chassis. Refer to Figure 13.

e. Set the Range Switch to Ohms positions 1000 MΩ to 100 Ω while checking the readout so that zero is indicated on all ranges (Model 160 only).

NOTE

If clip leads are used on the input terminals, the lead resistance may be indicated on the 100 Ω range since the last digit sensitivity is 0.1 Ω per digit.

f. Set the Range Switch to Amperes positions 1000 mA to 100 nA while checking the readout so that zero is indicated on all ranges (Model 160 only).

g. Remove the short circuit at the input terminals.

1. Volts Ranges. The instrument will normally read off zero a small amount on the 1 mV through 100 mV ranges because of sensitivity to random noise. The readout should remain at zero on the ranges 1V through 1000V.

2. Ohms Ranges (Model 160 only). All Ohms ranges should indicate a readout overload where all digits except a "1" in the overrange position are blanked.

The + polarity indicator should also be lighted.

3. Amperes Ranges (Model 160 only). All current ranges should indicate a zero readout.

h. After the preceding checkout is made, the instrument should be useable for all measurements with no further adjustments necessary.

2-12. DIGITAL OUTPUTS AND EXTERNAL CONTROLS.

a. General.

1. The Model 1602 Digital Output Kit provides optional BCD outputs and controls.

2. Included is a 50-pin PRINTER/CONTROL Connector (receptacle) for mounting on the instrument rear panel.

3. An output buffer card plugs into a prewired connector on the chassis for either factory or user installation. Buffer card replaces PC-255 interconnecting card.

b. Output Codes and Levels.

1. The PRINTER/CONTROL Outputs are Binary Coded Decimal (BCD) Signals with 1-2-4-8 standard code.

2. The standard signal levels are as follows:

Output Logic "1" > +5 volts with less than 100 microamperes leakage.
Output Logic "0" < +0.5 volts with +50 milliamperes maximum allowable current.

3. The Buffer Stages utilize "Open Collector" output transistors. Therefore, the user must supply a pull-up resistor R and external voltage V_{EXT} for each buffered output as shown in Figure 5.

c. Output Information.

The Model 1602 Digital Output Kit provides various BCD outputs and controls as described in Tables 2-7 and 2-8.

TABLE 2-7.

Model 1602 Outputs

DIGITAL OUTPUT: BCD (1, 2, 4, 8) open collector logic (Motorola MC 858P) represents each of 3 digits, overrange digit, overload ("1"), polarity (+ = "1"), and decimal position (2 bits).
TIMING OUTPUTS:
Clock: Internal clock pulses (10 kHz count rate).
Count Interval: Logic "0" appears during count interval (i.e. pulse width is proportional to analog input signal).
Flag: Logic "1" appears for a 300 millisecond interval out of a conversion time of 500 milliseconds. No change in buffer storage is made outside this interval.
OUTPUT LOGIC LEVELS:
Output Logic "1": open transistor collector to ground with less than 100 microamperes leakage. +12 volts maximum allowable applied voltage.
Output Logic "0": transistor switch closure to ground with less than 0.5 volt saturation voltage. +50 milliamperes maximum allowable current.
REMOTE CONTROLS:
Strobe: Open circuit to ground inhibits all output lines from conducting (closure to ground enables conduction).
Hold: Closure to ground retains result of last conversion in both the output register and the display.

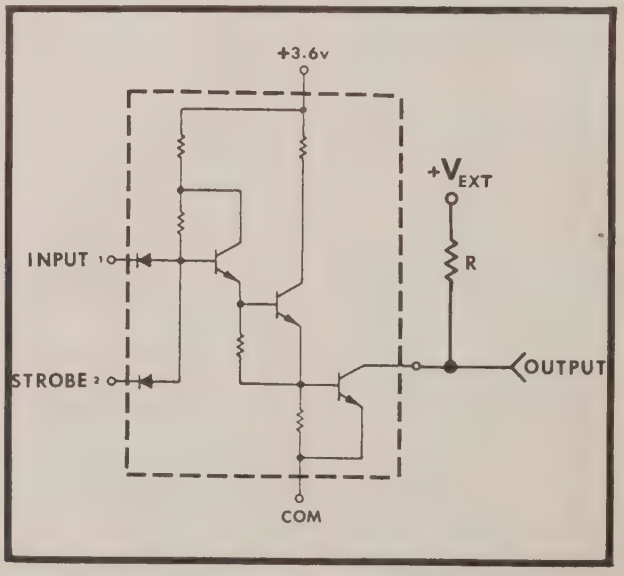

FIGURE 5. Model 1602 Output Buffer Stage.

TABLE 2-8.
Model 1602 PRINTER/CONTROL Connector Pin Identification

Pin No.	Output	Function	Pin No.	Output	Function
1	1×10^0	Data	26	Common	---
2	2×10^0	Data	27	Common	---
3	4×10^0	Data	28	Blank	---
4	8×10^0	Data	29	10 KHz	Clock
5	1×10^1	Data	30	Blank	---
6	2×10^1	Data	31	Blank	---
7	4×10^1	Data	32	Blank	---
8	8×10^1	Data	33	Blank	---
9	1×10^2	Data	34	Blank	---
10	2×10^2	Data	35	Blank	---
11	4×10^2	Data	36	Blank	---
12	8×10^2	Data	37	Blank	---
13	1×10^3	Data	38	Blank	---
14	+ = Logic "1"	Polarity	39	Blank	---
15	1×10^0	Decimal Point	40	Blank	---
16	2×10^0	Decimal Point	41	Blank	---
17	Blank	---	42	Blank	---
18	Logic "1"	Overload	43	Blank	---
19	Blank	---	44	Vcc2	Do not use
20	Count Interval	See Table 2-7.	45	Blank	---
21	Blank	---	46	Blank	---
22	Blank	---	47	Hold	See Table 2-7.
23	Flag	See Table 2-7.	48	Blank	---
24	Common	---	49	Strobe	See Table 2-7.
25	Common	---	50	Blank	---

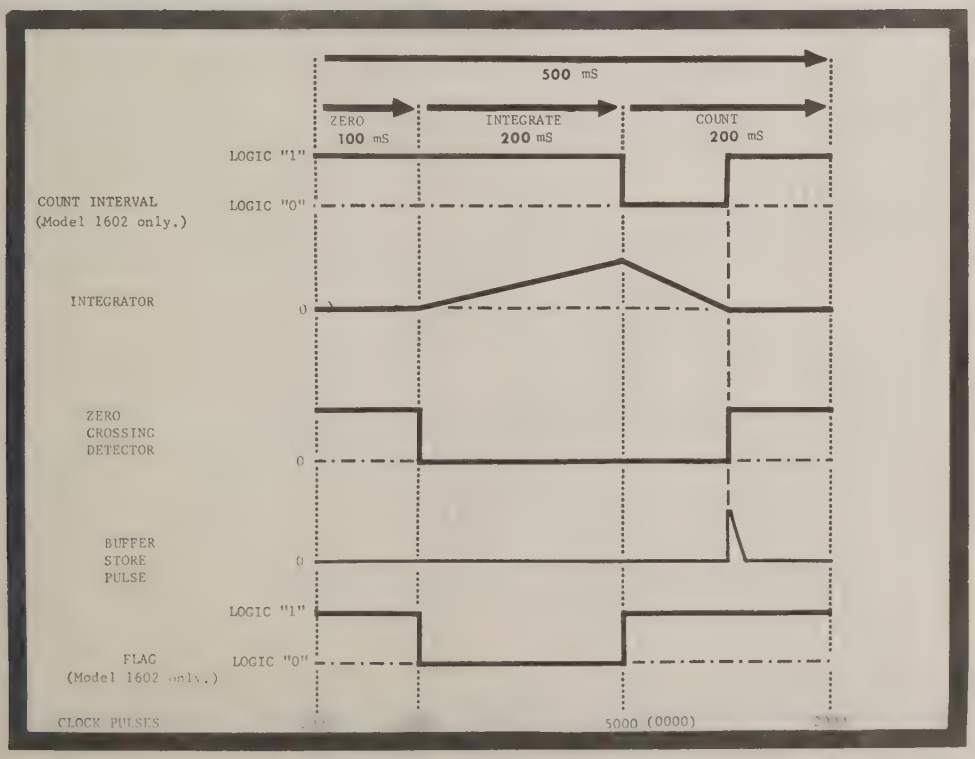

FIGURE 6. Timing Diagram.

SECTION 3. CIRCUIT DESCRIPTION

3-1. GENERAL.

a. The basic digital voltmeter consists of two sections packaged together in one chassis: 1) analog amplifier 2) analog to digital converter.

b. The analog amplifier is a variable-gain chopper amplifier.

c. The analog-to-digital converter is a dual-slope integrating type converter with two readings/second conversion rate. A BCD output and external control options are available when used with the Model 1602 Digital Output Kit.

3-2. ANALOG AMPLIFIER OPERATION. The analog amplifier is shown in the simplified block diagram, Figure 7.

a. Voltage Amplifier Operation. The amplifier has a full-scale sensitivity variable from 1 millivolt to 100 millivolts. Above 100 millivolts the input signal is divided down to the 100 mV full-scale level. The signal flow path can be described as follows: An input signal applied at the Input High terminal is attenuated by a resistor divider. The signal is filtered and applied to a modulator circuit. The a-c signal is then amplified and demodulated. A final variable gain d-c amplifier provides a d-c signal for the Analog output and A-to-D converter. The output is fedback to provide overall gain stability.

1. Input Resistor Divider. The input signal is attenuated by a divider network for RANGE Switch 1V, 10V, 100V and 1000V full-range positions.

2. Filter Network. The filter network provides filtering of Normal Mode noise.

3. Modulator Circuit. This circuit converts the low level d-c input to an a-c signal.

4. A-C Amplifier. This circuit uses negative feedback to provide gain accuracy and stability.

5. Demodulator Circuit. The demodulator is synchronized with the input modulator. It converts the amplified a-c signal to a d-c signal.

6. D-C Amplifier. This amplifier provides additional gain to drive the A-to D converter and Analog recorder output.

7. Chopper Drive Circuit. This circuit generates the drive voltage for the mod-demod choppers.

NOTE

The circuit description for the ammeter and ohmmeter functions apply only for the Model 160 Digital Multimeter. Refer to Figure 8.

b. Ammeter Operation (Model 160 only). The instrument operates as an ammeter by detecting the voltage drop across a known shunt resistor. The sensitivity and resistor values are shown in Table 3-1.

c. Ohmmeter Operation (Model 160 only). The instrument provides a known constant current which is applied to the unknown resistance. The voltage output is proportional to the resistance measured.

3-3. ANALOG AMPLIFIER CIRCUITRY.

a. General. The circuits described in this section are located on the various sub-assemblies listed below and in Table 7-3 of Section 7.

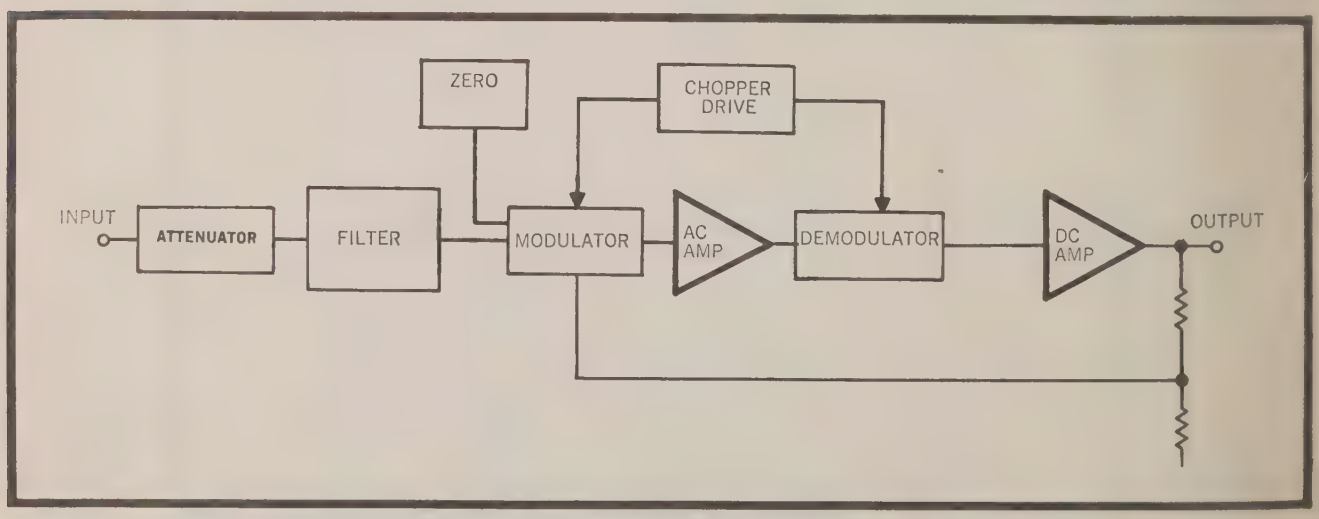

FIGURE 7. Analog Amplifier Block Diagram.

TABLE 3-1.

Full Scale Range Amperes	Shunt Resistor Ohms	Voltage Sensitivity
1×10^{-7}	10^5	10 mV
1×10^{-6}	10^4	10 mV
1×10^{-5}	10^3	10 mV
1×10^{-4}	10^2	10 mV
1×10^{-3}	10	10 mV
1×10^{-2}	1	10 mV
1×10^{-1}	.1	10 mV
1	.1	100 mV

1. Mother Board, PC-254.

2. Analog Amplifier, PC-251.

3. Connector Board, PC-255.

b. Voltage Amplifier Circuit. The voltage amplifier circuit is composed of a chopper amplifier with fractional feedback. The feedback resistors are selected by the Range Switch so as to maintain low feedback current. The feedback network, composed of resistors R513, R516, R519 and R703, is formed from the output of the d-c amplifier to the low side of the modulator.

1. Input Resistor Divider. The chopper amplifier has a minimum gain of 10 and a full-scale output voltage of ±1 volt. Thus it is necessary to attenuate signals greater than 100 millivolts to prevent saturation of the chopper amplifier. The input attenuator resistors R101, R102, and R103 through R111 are switched by the Range Switch S101.

2. Filter Network. The filter network provides NMRR as specified for line frequency voltages (either 50 or 60 Hz). The filter is a 2-section RC ladder filter composed of resistors R501 and R502 and capacitors C501 and C502.

3. Modulator Circuit. The modulator circuit utilizes MOS FET chopper switches to provide low offset voltage and current, low input noise, and low drive power. A series-shunt chopper configuration maintains high input impedance. Transistors Q701 and Q702 form the chopper.

4. A-C Amplifier. The a-c amplifier is a low noise amplifier composed of transistors Q703 and Q704 and an integrated circuit QA702.

5. Demodulator Circuit. The demodulator utilizes an FET shunt switch which is synchronized with the input modulator. The FET Q705 switching action creates a rectified d-c signal with a large chopper frequency a-c component. Resistors R717 and R718 with capacitor C710 provide a filtering action of the demodulated signal.

6. D-C Amplifier. The d-c amplifier utilizes an integrated circuit QA703 to provide d-c gain and capability of up to 1 milliampere at the analog output.

7. Chopper Drive Circuit. The chopper frequency signal is derived from the Oscillator circuit. Transistors Q706 and Q707 provide opposite phase square waves used to drive MOS-FET chopper transistors Q701 and Q702. Transistor Q708 provides a demodulator drive signal for FET Q705 which is synchronous with the modulator drive signals. Flip-Flop circuits QA701A and QA701B divide down the 909.09 Hz from the oscillator by 4:1 for a chopper drive of approximately 227.3 Hz.

8. Zero Adjustment Circuit. This circuit provides

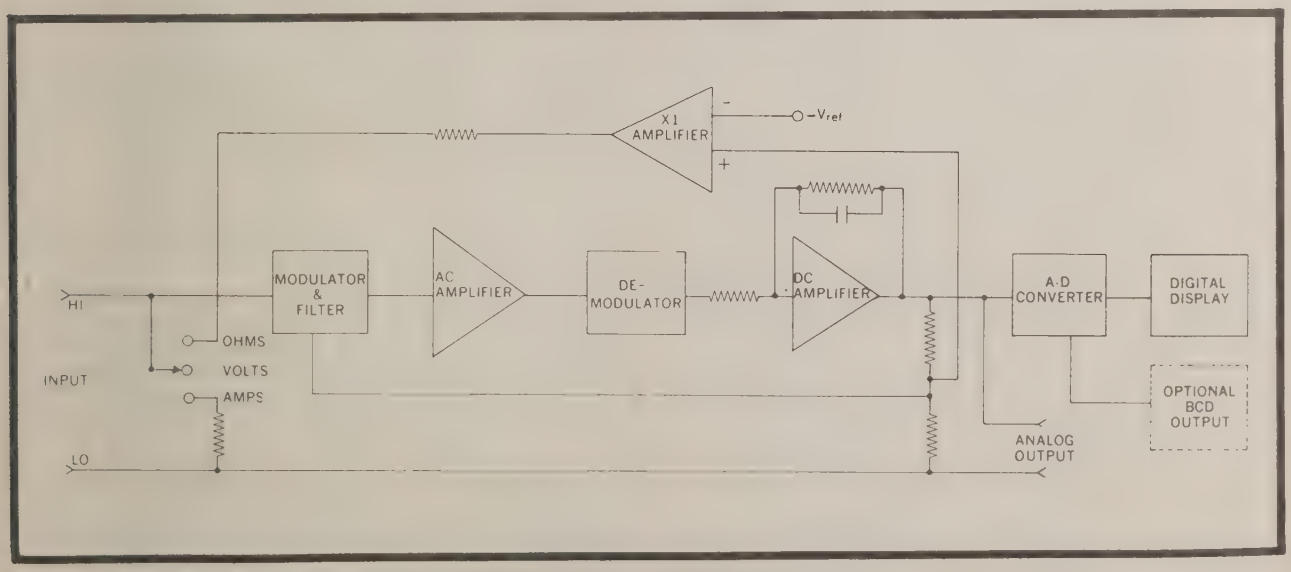

FIGURE 8. Multimeter Block Diagram.

limited adjustment of zero offset. It is composed of potentiometer R505 and resistors R503, R504, R506, R508 and R509.

c. Ammeter Circuit (Model 160 only). The instrument utilizes the chopper amplifier described above with various Range shunt resistors R116 through R122. The chopper amplifier functions as a voltage amplifier to provide an analog recorder output and drive for the A-to-D converter.

d. Ohmmeter Circuit (Model 160 only). The instrument provides a constant-current using a voltage reference amplifier and series resistor R. The reference voltage E limits the open-circuit voltage to 1.5 volts maximum. The voltage reference is composed of integrated circuit QA704 and reference diode D702.

3-4. ANALOG-TO-DIGITAL CONVERTER OPERATION.

a. General. (refer to Figure 9 for a detailed block diagram of the A-to-D converter) The analog-to-digital converter uses a dual slope integration technique which has inherent line frequency noise rejection. The analog signal is applied to the integrator for 200 milliseconds which is an even multiple of the line frequency of 50 or 60 Hz. The analog signal is then removed from the integrator input. The voltage on the integrator is then driven to zero to complete the voltage-to-time conversion. The time interval to reach a "Zero Crossing" is counted and displayed on the "Digital Readout" in proportion to the original analog signal. Before the sequence is repeated, the integrator is rezeroed. (Refer to the Timing Diagram shown in Figure 6.)

b. The A-to-D Converter is composed of eight major circuits.

1. Oscillator or Clock
2. BCD Counter
3. Program/Decoder
4. Integrator
5. Zero Crossing Detector
6. Buffer/Storage Register
7. Decoder/Driver
8. Numerical Readout.

c. Oscillator or Clock. The Oscillator produces pulses at a rate of 10 kilohertz for either 50 or 60 Hz operation.

d. BCD Counter. The BCD Counter counts the Clock pulses with a total range of 5000 counts. The Counter is composed of 4 individual counters designated 1, 10, 100, and 1000.

1. The "1", "10", and "100" counters have a capacity of ten counts each.

2. The "1000" counter has a capacity of five counts.

3. The total capacity of all four counters is 5000 counts.

e. Program/Decoder. The Program/Decoder circuit produces event commands to control the overall sequence of events for a complete A-to-D conversion.

TABLE 3-2.

Command	Function
2	ZERO
3,4	INTEGRATE
0,1	COUNT

f. Integrator. The Integrator circuit operation is composed of three periods (refer to Figure 6).

1. Zero Period. During this period the integrator amplifier is zeroed by a feedback rezeroing circuit as shown in Figure 10. Switches S_a, S_b, and S_d are open to prevent integrator charging.

2. Integration Period. During this period switches S_b, S_c, and S_d are open. Switch S_a is closed to permit charging by the analog voltage for an even multiple of the line frequency.

3. Discharge Period. During this period, switch S_a is open to prevent further charging by the analog signal. Either switch S_c or S_d is closed to drive the Integrator voltage to zero. A reference current of opposite polarity to the input current is applied through either switch S_c or S_d. The Discharge Period ends when the Zero Crossing Detector circuit detects a zero Integrator output.

g. Zero Crossing Detector. The Zero Crossing Detector circuit provides a "High" or "Low" level output depending on the polarity of the detected input. Refer to Table 3-3 for a description of voltage outputs of the Zero Crossing Detector.

TABLE 3-3.
Zero Crossing Detector Output Levels.

M	N	B	C
0V	-0.5V	-1.5V	0V
0V	+3.5V	0V	-1.5V

h. Buffer/Storage Register. The Buffer/Storage Register is composed of "flip-flops" arranged to copy the states of the various BCD counters. The Buffer/Storage Register requires a Buffer Store command before any information can be transferred. The "flip-flop" circuits provide coded information for Decoder/Driver and the BCD outputs.

i. Decoder/Driver. The Decoder/Driver circuit decodes the BCD information from the Storage Register into ten-line decimal code. The Driver circuit then drives the proper numeral in each of the Numerical Readout tubes.

j. Numerical Readout. The Numerical Readout con-

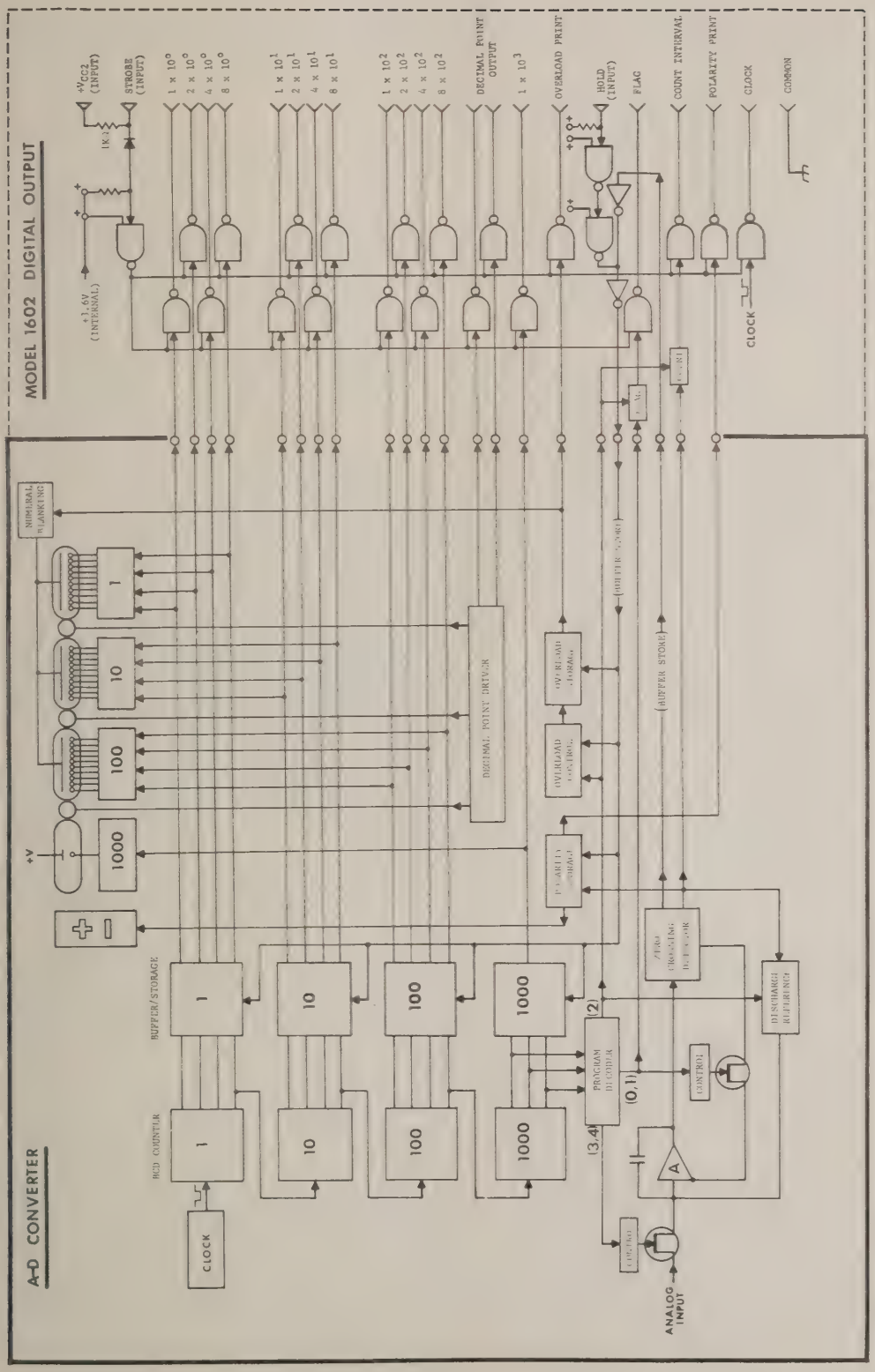

FIGURE 9. Analog-to-Digital Converter and Model 1602 Output Buffer

Block Diagram

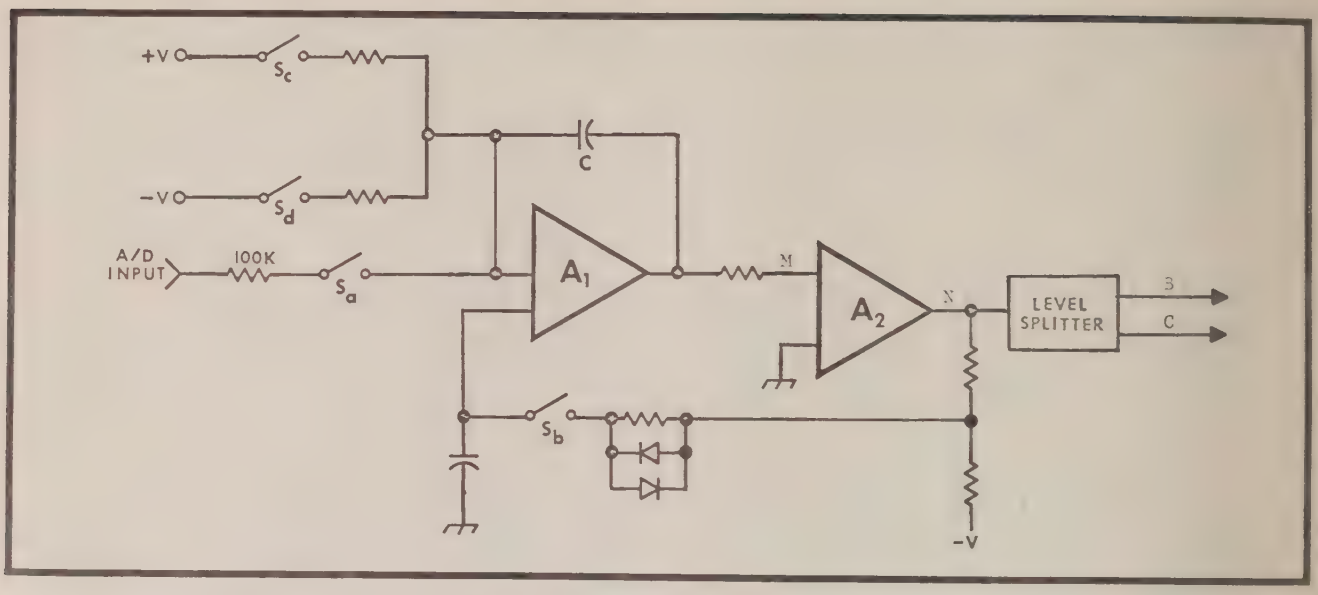

FIGURE 10. Integrator Block Diagram.

sists of four numerical indicators and one polarity indicator driven by the Decoder/Driver, Polarity and Overload Drivers.

k. Summary of Operation. The operation of the A-to-D Converter can be described by considering a typical conversion cycle.

1. The Clock provides pulses at a rate of 10 kilohertz.

2. The BCD Counter serves as a master timing control for the A-to-D conversion cycle. The timing is accomplished by the "1000" counter which has five coded states, namely 0, 1, 2, 3, and 4.

3. The Program/Decoder controls the sequence of commands based on the coded states from the BCD Counter. The decoded commands are described as shown in Table 3-2. The "2" command initiates the integrator ZERO period which removes any residual charge on the integrator capacitor. The "3,4" command initiates the INTEGRATE period which permits an integration of the analog signal. At the end of the INTEGRATE period, the "0,1" command initiates the COUNT period.

4. When the "3,4" command is given, the integrator is charged by the analog signal for a period of 200 milliseconds.

5. When the "0,1" command is given, the analog signal is removed and the integrator output is driven to zero by a reference current. The Zero Crossing Detector senses a zero crossing of the Integrator output and removes the reference current. The Detector provides outputs as shown in Table 3-3. The +1.5 volt levels are provided for control of the Integrator and Polarity Storage Register. A pulse command is also produced to initiate a Buffer/Store.

6. When the Buffer/Store command is given, the Buffer/Storage Register copies the BCD Counter states at that instant of time. The BCD coded information in the Register is then available for the Decoder/Driver and external printout.

7. The Decoder/Driver decodes the Buffer/Storage output and drives the Numerical Readout for a digital display.

8. The conversion cycle is completed when the BCD Counter reaches 2000 counts and the Program/Decoder provides a "2" command to initiate a new conversion cycle.

3-5. ANALOG-TO-DIGITAL CONVERTER CIRCUITRY.

a. General. The circuits described in this section are located on the various sub-assemblies listed below and in Table 7-3 of Section 7.

1. Tube Board, PC-248
2. Integrator Board, PC-250
3. Oscillator Circuit, PC-254.

b. Oscillator Circuit. The Oscillator circuit is located on a portion of printed circuit assembly PC-254. Refer to schematic diagram P/N 24691E for this circuit. Transistors Q601 and Q602, capacitors C601, C602, and C603 and resistors R606 and R607 form an oscillator. Potentiometer R605 is used to provide internal screwdriver adjustment of the oscillator frequency. Transistor Q603 serves as an emitter-follower to reduce output impedance. The chopper drive is obtained by dividing down the oscillator frequency from 10 Kilohertz to 909.09 Hz using integrated circuit QA801, a 11:1 Divider circuit.

c. Tube Board. The Tube board contains portions of five major circuits: the BCD Counter, the Program/Decoder, the Buffer/Storage Register, the Decoder Driver, and the Numerical Readout.

1. BCD Counter.

a) The Decade Counters designated "1", "10", and "100" are composed of individual integrated circuit modules QA308, QA309, and QA310 respectively.

b) The "1000" Counter is composed of integrated circuit modules QA301A, QA302A, and QA302B.

2. Program/Decoder. This circuit is composed of gates QA304A, QA304C, QA305 (B, C, D, E, F) QA306A and QA307B.

3. Buffer/Storage Register. This circuit is composed of integrated circuit modules QA311, QA312, and QA313.

4. Decoder Driver. This circuit is composed of integrated circuits QA314, QA315, and QA316.

5. Numerical Readout. V301, V302, V303 are Readout Tubes for Units, Tens, and Hundreds respectively.

6. Other circuits contained on the Tube Board are described as follows.

a) Overrange Indicator Circuit. This circuit is composed of integrated circuit module QA301B, transistor Q301 and overload indicator DS301.

b) Polarity Indicator Circuit. This circuit is composed of transistors Q305 and Q306 and Polarity indicator module DS302.

c) Display Rate/Hold Circuit. Gates QA303 (A, B, C, D) and QA304B, QA306B, and QA307A provide capability for Display Rate and Hold functions when used with additional Output Buffer circuits.

d. Integrator Board. The Integrator Board contains portions of three major circuits: the Integrator circuit, the Zero Crossing Detector Circuit, and the Feedback Rezeroing Circuit.

1. Integrator Circuit. (Refer to Figure 10 for identification of switches S_a, S_b, S_c, and S_d). The operation of the Integrator is controlled by the positions of switches S_a, S_b, S_c, and S_d. Switch S_a is Q401. Switch S_b is transistor Q411. Transistors Q404, Q405, Q408, Q409, and Q410 are control circuits arranged to control the proper FET switches depending on the signals at pins 12 and 13. The integrator amplifier consists of transistors Q402 and Q403 and integrated circuit QA401. The feedback capacitor is C406. Switches S_c and S_d control the current for 9-volt zener diodes D401 and D402. Resistors R403, R404, R405, R409, R410, and R411 are full-scale calibration resistors. Potentiometers R402 and R408 are internal screwdriver calibration adjustments.

2. Zero Crossing Detector Circuit. The high gain amplifier is composed of cascaded amplifiers QA402 and QA403. Diode D411 provides a 6-volt bias supply for QA403 and the output resistor network R444 and R445. The level-splitter circuit consists of diodes D414 and D415, resistors R443 and R446 and gates QA404 (A and B).

3. Feedback Rezeroing Circuit. This circuit provides rezeroing of the Integrator circuit using negative feedback from the Zero Crossing Detector output. Transistor Q411 is the equivalent of Switch S_b in Figure 10. Resistor R434 and capacitor C414 form a feedback-loop filter circuit. Diodes D407 and D408 provide fast response for large input offsets due to input overloads.

3-6. POWER SUPPLIES.

a. ±15 Volt Supply.

1. The ±15 volt supplies tap a-c power from a secondary winding of transformer T201. Diodes D203 (A, B, C, and D) and capacitors C204, C205, C209, and C210 compose a full-wave rectifier with filtering.

2. The +15 volt regulator circuit utilizes integrated circuit QA201 which drives transistor Q206 to series regulate the output voltage. Potentiometer R209 provides calibration adjustment of the +15 volt supply. (Internal screwdriver adjustment).

3. Transistors Q211 and Q212 form a differential amplifier which compares the voltage at R218 with respect to low. The difference voltage is amplified by transistor Q210 and fed to Darlington transistor pair, Q207 and Q208, which series regulate the -15 volt output. Transistor Q209 limits the current output to approximately 200 milliamps.

b. +3.6 Volt Supply.

1. The +3.6 volt supply taps a-c power from a secondary of transformer T201. Diodes D201 and D202 and capacitor C201 form a full-wave rectifier with filtering.

2. Transistor Q205 amplifies the difference between the +3.6 output and a reference voltage derived from the +15 volt supply and determined by resistors R203 and R204. The difference voltage is amplified by transistor Q204 which drives a Darlington transistor pair, Q201 and Q202. The Darlington pair series regulates the +3.6 volt output.

3. Transistor Q203 limits the output current to about 3 amperes.

c. +210 Volt Output. The +210 volt supply is an unregulated voltage supply using the half-wave filtered voltage at diode D206 and capacitor C212.

d. +170 Volt Output.

1. Regulator. The +170 volts is derived from the +210 volts at emitter of Q302 which series regulates the +170V. Transistor Q303 provides a reference for the base of transistor Q302.

2. Blanking Circuit. This circuit controls the +170 voltage for the three right hand readout tubes. The "Q" output of QA307B drives the base of transistor Q304 for normal regulator operation. When an overload occurs, the "Q" output is low turning off transistor Q304. This results in a drop of the +170 volt output causing blanking of the readout tubes.

SECTION 4. ACCESSORIES

MODEL 1601 AC-DC PROBE

GENERAL. The Model 1601 is a combination ac-dc probe that enables the user to measure voltages from 45 Hz to 45 kHz when used with either the Model 160 or 163. The slide switch (S101) can be used to select either AC mode or straight-through DC Mode.

SPECIFICATIONS:

DC MODE: Straight-through probe does not alter any Model 160 or 163 specifications except: 1. 150 picofarads input capacitance, 2. 0.5 ampere maximum current, 3. 0.3 ohm resistive offset, 4. ±20 microvolts thermal offset.

AC MODE (Voltage only):
- ACCURACY (400 Hz): ±1% of reading or ±0.1 volt, whichever is greater (rms of sine wave to dc conversion).
- FREQUENCY RESPONSE: -2% at 45 Hz and 45 kHz.
- RANGE: 250 volts rms maximum.
- MAXIMUM OVERLOAD: Peak ac plus dc bias must not exceed 400 volts.
- INPUT IMPEDANCE: 0.5 megohm, shunted by less than 20 picofarads.
- OUTPUT IMPEDANCE: Output must be shunted by 10.2 megohms ±1% for rated accuracy (Model 160 and 163 impedance on 1000, 100 and 10-volt ranges). 10% variation in the 10.2 megohms causes 1% additional error.

CONNECTOR: Shielded Banana Plug

DIMENSIONS, WEIGHT: 6" long x 3/4" diameter (150 x 20 mm), 3-ft. (1 m) cable, net weight 1/4 pound (0.1 Kg).

MECHANICAL PARTS LIST:

Item No.	Description	Keithley Part No.
1	Tip	24654B
2	Body, Front	24656C
3	Body, Rear	24655C
4	Strain Relief	18676B
5	Cable, Ground (13" long)	SC-33
6	Clip, Alligator (Ground)	AC-10
7	Insulator (Black)	AC-11
8	Cable (40" long)	SC-30
9	Strain Relief	18676B
10	Can Shield	25128A

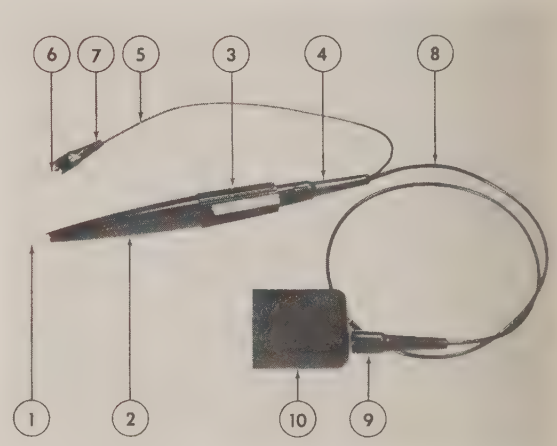

ELECTRICAL PARTS LIST: (See schematic 24669C)

Circuit Desig.	Description	Mfr. Code	Mfr. Part No.	Keithley Part No.
J101	Banana Plug (2 req'd)	74970	108-750-2	BG-3
S101	Switch, AC-DC	80164	-	SW-334
C101	Capacitor, .047 µF	97419	M2W-F	C197-.047M
C102	Capacitor, 0.1 µF	13050	MW1A	C86-.1M
D101	Transistor	07263	2N3565	TG-39
D102	Transistor	07263	2N3565	TG-39
D103	Diode	04713	1N4006	RF-38
R101	Resistor, 3.92 MΩ	91637	DC-1/4	R178-3.92M
R102	Resistor, Selected in Test	07716	CEA	R88
R103	Resistor, 1 MΩ	91637	MFF-1/8	R179-1M
R104	Resistor, 100 Ω	44655	RC07	R76-100

MAINTENANCE:
Since the probe assembly should provide good service with normal handling no maintenance is usually necessary. The probe body (Items 2 and 3) is fastened together at the factory using a special solvent. Therefore the probe should not be disassembled. If repair is necessary contact the Keithley Representative in your area.

Model 1602 Digital Output

Installation: The 1602 Digital Output Option is available either factory or field installed in a Model 160 or 163.

Applications: The 1602 can be used whenever binary coded decimal outputs are needed for digital recording or computing.

Specifications: The 1602 specifications are given in Table 2-7 of the Instruction Manual.

Connections: Digital BCD outputs and controls are provided through a 50-pin receptacle (J1006) installed on the rear panel of the instrument. The mating connector is a Keithley Part No. CS-220.

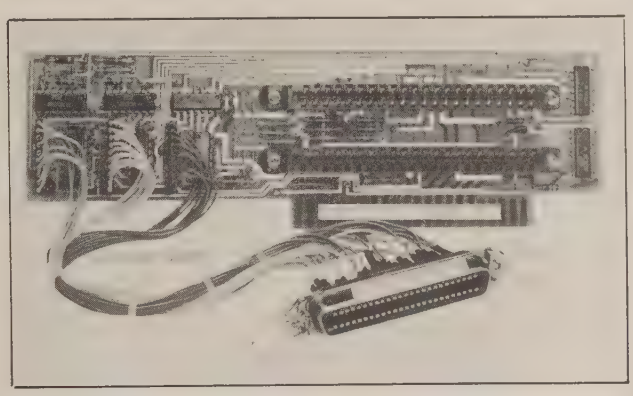

Model 1603 Extender Card Kit

Description:

The 1603 Kit consists of two types of printed circuit board extender cards and a shorting adapter.

Parts List:

1 Extender Card, 44-pin, Keithley No. 24681C
2 " " 22-pin " " 24570B
3 Shorting Adapter, Keithley No. 24789A

Application:

These extender cards facilitate testing and troubleshooting of Models 160 and 163. Access to all pin connections is provided. The shorting adapter is used to connect power to the instrument.

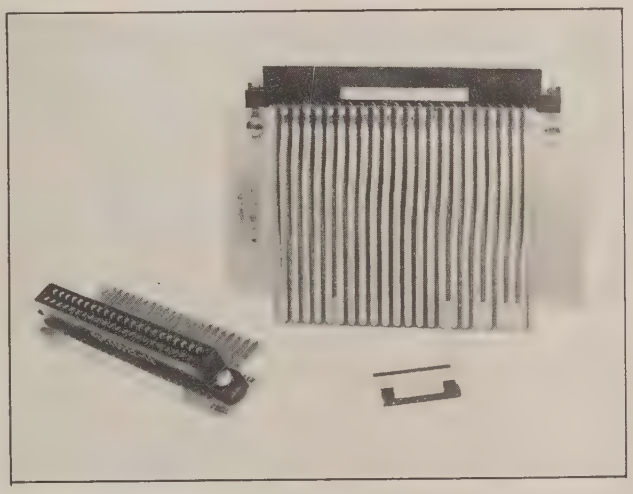

Model 1005 Rack Mounting Kit.

General: The Keithley Model 1005 Rack Mounting Kit has been designed for rack mounting either the Model 160 Digital Multimeter or Model 163 Digital Voltmeter. The Kit includes all necessary parts for rack mounting either one instrument or two instruments side-by-side. Rack height is 3-1/2 inches with 10-1/2 inches depth measured from the front panel.

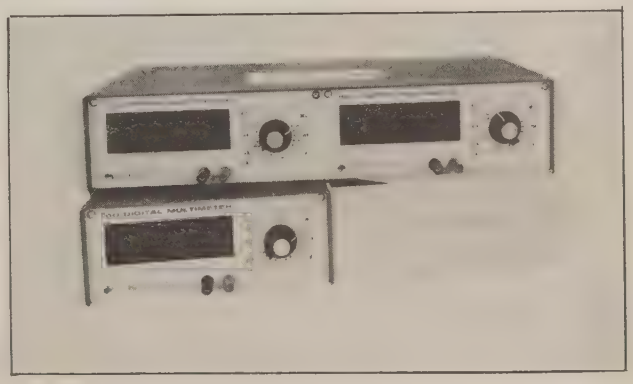

SECTION 5. SERVICING

5-1. GENERAL. This section contains procedures for servicing the instrument in the event of a malfunction.

5-2. SERVICING SCHEDULE. This instrument requires no periodic maintenance beyond the normal care required for high-quality electronic equipment.

5-3. PARTS REPLACEMENT. Replace components using only those parts specified in the REPLACEABLE PARTS LIST or their equivalents.

5-4. ASSEMBLY

WARNING

Use care when troubleshooting an instrument connected to line power and/or with Power switch on. Whenever resistance checks are made, remove all power to the instrument and discharge power supply capacitors through a low value resistor.

a. Top Cover Assembly. To gain access to test points and adjustments on printed circuit board PC-254, remove the top cover by removing four slotted head type screws as shown in Figure 17. Refer to Figure 16 for calibration controls and test points.

b. Chassis Assembly. To gain access to the remaining printed circuit boards the following procedure should be used.

1. Remove the front panel Range knob assembly as shown in Figure 11b. Loosen the two set screws holding the switch coupler to the switch shaft using a 1/16 hex size (Allen Head) screw driver. Figure 11a shows the proper orientation of the Range knob for reassembly.

2. Remove the front panel Allen Head screws in two places as shown in Figure 11b using a 3/32 hex size screw driver.

3. Remove the rear panel Phillips head screws in two places as shown in Figure 11b.

4. Remove connector J906 which is wired to the front panel Power ON switch as shown in Figure 12. Replace connector with Shorting Adapter 24789A (from Model 1603 Extender Card Kit) which will apply power to the instrument. Caution! To turn off power to the instrument remove the Shorting Adapter.

5. Separate the circuit board assembly from the chassis as shown in Figure 12.

c. Printed Circuit Board Installation. The location of all circuit boards is shown in Figure 13. To gain access to circuit boards PC-248, PC-250, and PC-255 the following procedure should be used.

1. Remove the two Phillips head screws from the underside of PC-254 as shown in Figure 13.

2. Remove the slotted screw and nut holding PC-248 and PC-250.

3. Remove the long slotted screw and fastener as shown in Figure 13.

4. Remove the two standoffs holding PC-248 and PC-250.

5. Remove circuit board PC-255 and replace with Extender Card 24681C (from Model 1603 Extender Card Kit).

5-5. CALIBRATION CONTROLS.

a. Offset Current Adjust (R733). This control is a screw driver adjustment accessible from the bottom cover as shown in Figure 15.

b. Ohms Cal Adjust (R738). This control is a screw driver adjustment accessible from the bottom cover as shown in Figure 15.

c. DC Balance Adjust (R722). This control is an adjustment accessible from the bottom cover as shown in Figure 15. Caution! Use an insulated screw driver to avoid contacting the chassis.

d. 15V Adj (R209). This control is located on PC-254. Remove the top cover for access to the control.

e. CLOCK Adj (R605). This control is located on PC-254. Remove the top cover for access.

f. 1V, 10V, 100V, 1000V Controls (R111, R108, R106 R104). These controls are also located on PC-254.

g. +CAL, -CAL Adjust. These controls are located on PC-250.

5-6. COMPONENT LAYOUTS AND OUTLINE DRAWINGS.

a. Component Layouts. The component layouts identify all parts on the printed circuit boards using circuit designations from the schematic diagrams.

b. Outline Drawings. The outline drawings identify the various pins for integrated circuits and transistors used in this instrument. The case outlines are adapted from JEDEC standards for integrated circuit and transistor packages.

TABLE 5-1.

Chassis Part Identification

Item No.	Description	Keithley Part No.
1	Chassis	24010B
11	Screw, Hex socket	#8 x 3/8
12	Screw, Phillips head	#8 x 5/8
13	Knob	KN-33
14	Switch coupler	24583A
15	Printed Circuit Board	PC-254
16	Switch, S101	SW-319
17	Cable harness	---
18	Connector (J906)	CS-237
19	Shorting Adapter	24789A
20	Printed Circuit Board	PC-251
21	Printed Circuit Board	PC-255
22	Printed Circuit Board	PC-248
23	Printed Circuit Board	PC-250
24	Screw, slotted	#4 x 2-1/4
25	Fastener, hex nut	#4-40
26	Standoff (2 req'd)	24193A
27	Screw, Phillips head	#6 x 5/16
28	Screw, slotted	#6 x 5"
29	Fastener	FA-107

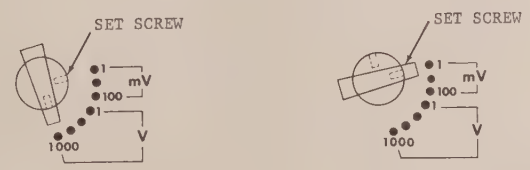

STEP 1.
1000 V POSITION

STEP 2.
1 mV POSITION

FIGURE 11a. Range Knob Assembly.

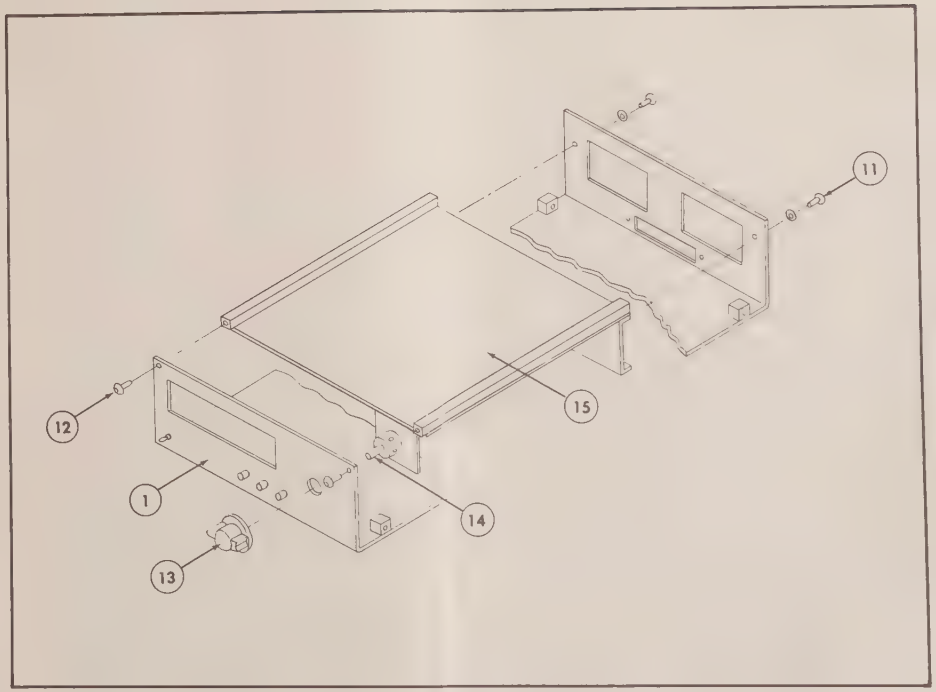

FIGURE 11b. Chassis Assembly.

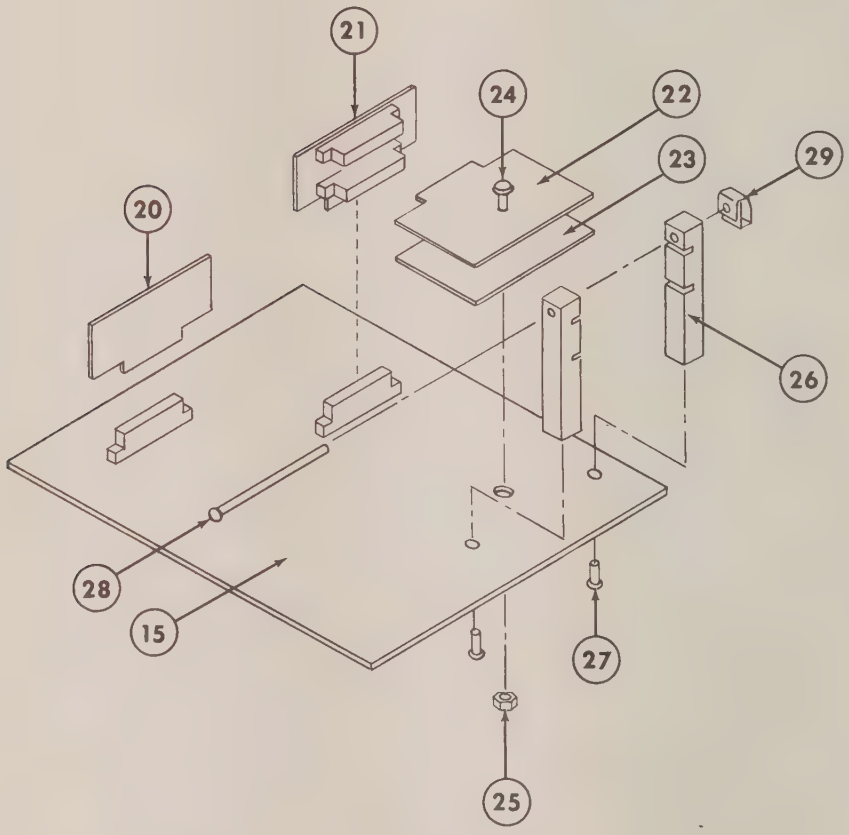

FIGURE 13. PC Board Locations.

TABLE 5-2.

Trouble-Shooting Procedure

Difficulty	Probable Cause	Solution
No front panel display illumination.	Power failure	Check fuse. If blown, check for an internal short (broken wire, loose hardware, etc.). Replace fuse by removing top cover and unsoldering pig-tail fuse.
"	210V supply failure	Check 210V supply voltage on PC-254. If low, check rectifier diode D206. Replace with Keithley Part No. RF-17.
"	Line switch set at 234V with 117V line input.	Set switch to 117V.
Overload indication when input is shorted.	Analog amplifier out of balance.	Check integrated circuit QA703 on analog board PC-251. Replace with Keithley Part No. IC-2. If difficulty remains, check MOS FET transistor Q701 and Q702. Replace with Keithley Part No. TG-51. NOTE: These transistors are sensitive to static charges. Therefore, drain static charge from hands and/or tools using a foil grounding surface. Disconnect the soldering iron from power before using.
"	Transistors Q402 and Q403	Check for zero voltage level on pin 6 of integrated circuit QA401. If not at zero, replace transistors with Keithley Part No. TG-71.
"	Oscillator Circuit (Clock)	Check CLOCK frequency at CLOCK test point. Frequency should be 10 kHz ±20 Hz. If out of tolerance, recalibrate as in Section 6. If clock frequency is missing, check transistors Q601, Q602 and Q603. Replace with Keithley No. TG-62.
Ohms ranges inaccurate. (Voltage ranges are normal)	Ohms reference amplifier	Check integrated circuit QA704. NOTE: Integrated circuit may have failed due to voltage applied in ohms mode. Replace QA704 with Keithley Part No. IC-2. Also replace resistor R745 with Keithley Part No. R168-10K. Recalibrate OHMS circuit. Select R739 as necessary.
Current reading inaccurate on one range only.	Shunt resistor out of tolerance.	Replace shunt resistor for that particular range. Resistors R116 through R122.
Overrange "1" not lighted when it should indicate.	Transistor Q301 or integrated circuit QA301.	Replace transistor Q301 if shorted from collector to emitter (Keithley Part No. TG-67). Otherwise, replace QA301 with Keithley Part No. IC-9.
Overrange "1" lighted continuously when it should not indicate.	Transistor Q301 or integrated circuit QA301.	Replace as above.
Polarity signs remain lighted or do not light at all.	Transistors Q305 and Q306. Integrated circuit QA305.	Replace transistors Q305 and Q306 with Keithley Part No. TG-67. Replace QA305 with Keithley No. IC-7.
Digital readouts incorrect.	Decoder driver circuit	Replace either QA314, QA315, or QA316 with Keithley Part No. IC-3. (These integrated circuits are not soldered because of plug-in sockets.)
"	Decade Counter circuit	Replace either QA308, QA309, or QA310 with Keithley Part No. IC-17.
"	Buffer Storage circuit	Replace either QA311, QA312, or QA313 with Keithley Part No. IC-16.

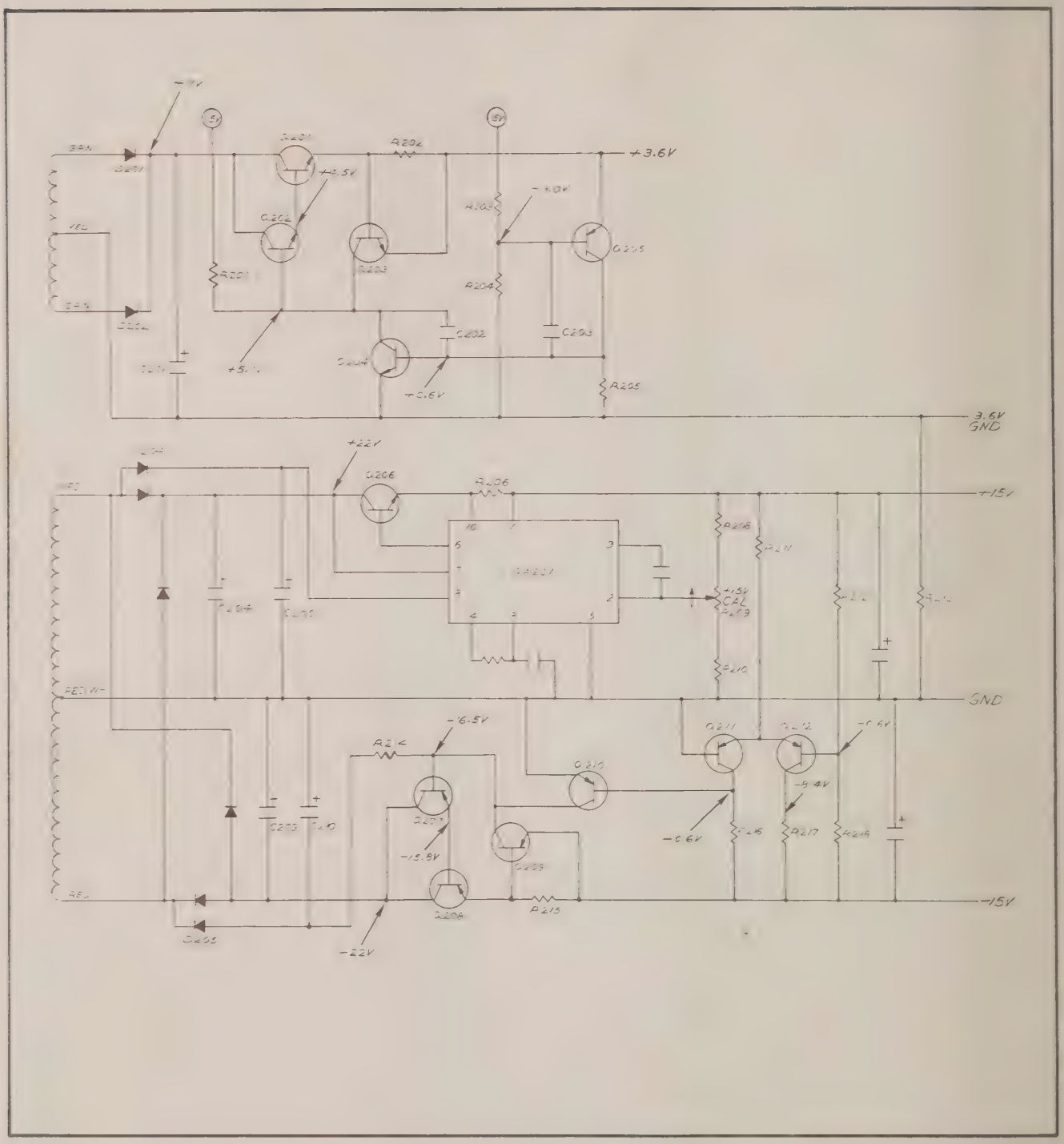

FIGURE 14. Power Supply Voltages.

SECTION 6. CALIBRATION

6-1. GENERAL. This section contains procedures for checking the instrument to verify operation within specifications.

6-2. TEST EQUIPMENT. Use test equipment recommended in Table 6-1 for accuracy verification.

6-3. PROCEDURES.

a. Preliminary.

1. Warm-up Period. With Power Switch ON, allow the instrument to warm-up for a minimum of 30 minutes.

2. Power Supply Checkout. All the power supply voltages can be measured at test points on printed circuit board PC-254 as shown in Figure 16.

TABLE 6-2.

Power Supply Voltages

Nominal Voltage	Test Point	Voltage Limits
+15.00V dc	+15V	+14.95 to +15.05
+15.0V dc	-15V	-14.6 to -15.4
+3.6V dc	+3.6V	+3.4 to +3.8
+210V dc	+210V	+220 to +230

b. Adjustments.

1. Power Supply. The +15V supply should be adjusted for +15.00V dc ±0.050V using potentiometer R209 on PC-254 as shown in Figure 16. The -15V and +3.6V supplies cannot be adjusted since the +15V supply is used as a reference voltage.

2. Clock Frequency. Measure the clock frequency at the "CLOCK" test point on PC-254 as shown in Figure 16. The frequency should be adjusted for a nominal 10 kHz, ±20 Hz using potentiometer R605 on PC-254 as shown in Figure 16.

3. Zero Adjust. Place a shorting wire across the Input Terminals (red and black). Connect voltmeter (A) to the analog OUTPUT (J103). Adjust the rear-panel ZERO Control (R505) for zero on the 1 mV range.

4. The output should be adjusted within ±1 millivolt.

5. DC Balance. With voltmeter (A) connected to the OUTPUT adjust the OFFSET CURRENT ADJ Control (R733) for zero on the 1V range. The OUTPUT should be adjusted within ±1 millivolt on the 1mV range and within ±0.1 millivolt on the 1V range. Repeat the adjustments of R505 and R733 until the OUTPUT is within tolerance on both the 1 mV and 1V ranges simultaneously.

If the OUTPUT cannot be adjusted within ±1 millivolt on the 1 mV range, internally short out the zero pot R505 by inserting a jumper between input low (grounded) and the junction of R503 and C504. Also, short the input of the Model 160 with a jumper. Adjust R505 to approximately midrange (7 turns from either end). Set the range switch to 100 millivolts and adjust the DC Balance pot R722 (located on PC-251) for zero at the OUTPUT. Set the range switch to 1 volt and adjust the OFFSET CURRENT pot R733 for zero at the OUTPUT.

6. Analog Calibration.

a). Voltage Ranges. Connect voltmeter (B) to the analog OUTPUT. Connect voltage source (C) to the Input Terminals (red and black). Measure the analog OUTPUT voltage for each range as described in Table 6-3. On the 100 mV, 10 mV, and 1 mV ranges wire jumpers are used for calibration. On the 1V, 10V, 100V, and 1000V ranges potentiometers R111, R108, R106, and R104 should be adjusted.

b). Resistance Ranges (Model 160 only). Connect decade resistance box (D) to the Input Terminals. Measure the analog OUTPUT for each range as described in Table 6-4. Adjust the OHMS CAL potentiometer (R738) for an OUTPUT of +1V ±1.0 millivolt on the 1 kΩ range only. The remaining resistance ranges cannot be adjusted.

c). Current Ranges (Model 160 only). Connect current source (E) to the Input Terminals. Measure the analog OUTPUT for each current range as described in Table 6-5. No calibration adjustments can be made on any of the current ranges.

7. Digital Calibration.

a). Zero Check. Connect a shorting wire across Input Terminals. Adjust the rear-panel ZERO Control so that the Digital Display reading is 0-0-0-0 on the 1 mV range with the Polarity Indicator alternating plus and minus. Measure the analog OUTPUT voltage which should be within ±1 millivolt.

b). Full-Scale Indication. Connect voltage source (C) to the Input Terminals and adjust the source for +1.9992V measured at the analog OUTPUT. Adjust the -CAL Control (R402) so that the Digital Display has a reading which alternates between 1-9-9-9 and a blanked display (with only the overrange "1" lighted). Apply a negative input and adjust the +CAL Control (R408).

c). Linearity Adjustment. Connect an accurate voltage source (C) to the Input Terminals and adjust for an analog OUTPUT of +0.9992V on the 1V range. Verify that the Digital Display reading is 0-9-9-9. Readjust the voltage source for an analog OUTPUT of +0.9998V on the 1V range. Verify a change of the Digital Display from 0-9-9-9 to 1-0-0-0.

TABLE 6-1.

Test Equipment

Code Letter	Instrument Type	Specification	Manufacturer and Model No.	Use
A	Voltmeter, Digital	±1μV to ±1000V ±0.1% of reading	Keithley, Model 160	Zero Adjustment
B	Voltmeter, Differential	limit of error ±0.01% of reading or 10μV	Keithley, Model 662	Voltage Calibration Current " Resistance "
C	Voltage Source	.003% voltage mode 10, 100, 1000 volts	Fluke, Model 3330B Voltage Source	Voltage Calibration 10, 100, 1000 volts
			ESI type SR-1010 Divider Ratio	.001, .01, .1, 1 volts
D	Resistance Box	±.02% accuracy 10 megohms maximum	General Radio Type 1433 Decade Resistor	Resistance and Current Calibration
E	Current Source	.006% 0.1mA to 100mA	Fluke, Model 3330B Current Source	Current Calibration 0.1mA to 100mA ranges
		.003% voltage mode .02% resistance accuracy	Fluke, Model 3330B Voltage Source (1.01V) General Radio Type 1433 Decade Resistor	Current Calibration .001 to .01mA ranges

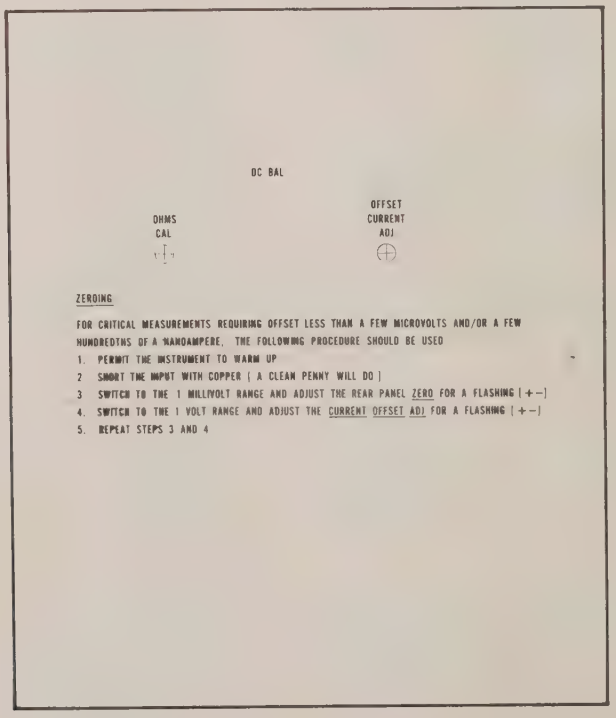

FIGURE 15. Chassis, Bottom View.

TABLE 6-3.
Voltage Range Calibration.
Summary of Calibration Controls and Test Points.

Range Setting	Input Source	Source Accuracy	Analog OUTPUT Voltage	Analog OUTPUT Accuracy	Ref. Desig.	Control
100mV	100mV	±.01%	1.000V	±1mV	R520, R521	Jumper
10mV	10mV	±.01%	1.000V	±1mV	R517, R518	Jumper
1mV	1mV	±.01%	1.000V	±1mV	R514, R515	Jumper
1V	1V	±.01%	1.000V	±1mV	R111	1V CAL
10V	10V	±.01%	1.000V	±1mV	R108	10V
100V	100V	±.01%	1.000V	±1mV	R106	100V
1000V	1000V	±.01%	1.000V	±1mV	R104	1000V

TABLE 6-4.
Resistance Range Calibration.
Summary of Calibration Controls and Test Points.

Range Setting	Input Source	Source Accuracy	Analog OUTPUT Voltage	Analog OUTPUT Accuracy	Ref. Desig.	Control
1KΩ	1KΩ	±.01%	1.000V	±1mV	R738	OHMS CAL
100Ω	100Ω	±.02%	1.000V	±1mV	---	None
10KΩ	10KΩ	±.02%	1.000V	±4mV	---	None
100KΩ	100KΩ	±.02%	1.000V	±3mV	---	None
1MΩ	1MΩ	±.02%	1.000V	±3mV	---	None
10MΩ	10MΩ	±.4%	1.000V	±40mV	---	None
100MΩ	100MΩ	±1%	1.000V	±100mV	---	None
1000MΩ	1000MΩ	±3%	1.000V	±500mV	---	None

TABLE 6-5.
Current Range Calibration.
Summary of Calibration Controls and Test Points.

Range Setting	Input Source	Source Accuracy	Analog OUTPUT Voltage	Analog OUTPUT Accuracy
0.1μA	0.1μA	±.02%	1.000V	±2mV
1μA	1μA	±.02%	1.000V	±2mV
10μA	10μA	±.02%	1.000V	±2mV
100μA	100μA	±.02%	1.000V	±2mV
1mA	1mA	±.02%	1.000V	±2mV
10mA	10mA	±.02%	1.000V	±2mV
100mA	100mA	±.02%	1.000V	±3mV
1000mA	1000mA	±.02%	1.000V	±3mV
1000mA	100mA	±.02%	0.100V	±0.3mV

CROSS REFERENCE FOR REPLACEABLE PARTS LIST

NOTE: The circuit designations refer to the circuitry shown on the schematic diagrams. The Keithley part number should be used for ordering replacement parts.

The complete information for each part is given in the REPLACEABLE PARTS LIST.

MOTHER BOARD, PC-254

Schematics 24687E, 24694D, 24691E

Circuit Desig.	Keithley Part No.	Circuit Desig.	Keithley Part No.
C101	C22-.0047M	Q210	TG-33
C102	C22-.0047M	Q211	TG-33
C103	C22-.0047M	Q212	TG-33
R101	R170-10M	QA201	IC-14
R102	R94-200K	R201	R76-6.8K
R103	R169-1K	R202	R151-0.2
R104	RP50-50	R203	R88-10K
R105	R169-10K	R204	R88-2.49K
R106	RP50-500	R205	R76-1K
R107	R169-100K	R206	R12-3
R108	RP50-5K	R207	R76-1.8K
R109	R169-1M	R208	R88-3.32K
R110	R88-100K	R209	RP50-1K
R111	RP64-50K	R210	R88-3.01K
R112	R13-10[7]	R211	R76-15K
R113	R37-10[9]	R212	R88-7.5K
R114	R14-10[8]	R213	R1-10
R115	R169-1M	R214	R76-33K
R116	R169-100K	R215	R12-3
R117	R169-10K	R216	R76-33K
R118	R169-1K	R217	R76-33K
R119	R169-99.9	R218	R88-7.32K
R120	R167-.1	R219	R1-82
R121	R95-1	R220	R76-1M
R122	R95-10	S202	SW318
R123	R76-220	C501	C143-.1M
C201	C93-2000M	C502	C143-.1M
C202	C22-220P	C503	C188-2M
C203	C22-150P	D501	RF-14
C204	C177-200M	D502	RF-14
C205	C177-200M	R501	R1-150K
C206	C179-10M	R502	R1-10K
C207	C22-470P	R503	R88-1M
C208	C3-125M	R504	R88-49.9K
C209	C177-200M	R505	RP64-100K
C210	C177-200M	R506	R88-49.9K
C211	C3-125M	R507	NOT USED
C212	C173-15M	R508	R88-1.5K
D201	RF-34	R509	R88-1.5K
D202	RF-34	R510	R76-10M
D203	RF-36	R511	R37-10[8]
D204	RF-14	R512	R37-10[9]
D205	RF-14	R513	R169-89.9K
D206	RF-17	R514	R88-100
F201	FU-33	R515	R88-100
F202	FU-35	R516	R169-8.99K
Q201	TG-54	R517	R76-10
Q202	TG-68	R518	R76-10
Q203	TG-39	R519	R169-899
Q204	TG-39	R520	R12-1
Q205	TG-33	R521	R12-1
Q206	TG-43	C601	C143-.047M
Q207	TG-33	C602	C189-500P
Q208	TG-50	C603	C189-500P
Q209	TG-33	C604	C189-1500P
C605	C179-10M	R607	R168-32.4K
D601	RF-28	R608	R76-1.5K
Q601	TG-62	R609	R76-3.9K
Q602	TG-62	R610	R76-47
Q603	TG-62	R611	R88-10K
R601	R88-3.01K	J901	CS-182
R602	R88-113K	J902	CS-182
R603	R88-100	J903	CS-237
R604	R168-6.98K	J904	CS-237
R605	RP50-5K	J905	CS-237
R606	R168-32.4K	J906	CS-237

CONNECTOR BOARD, PC-255

C801	C22-.001M	QA801	IC-21
J801	CS-182	R801	R76-10K
J802	CS-205		

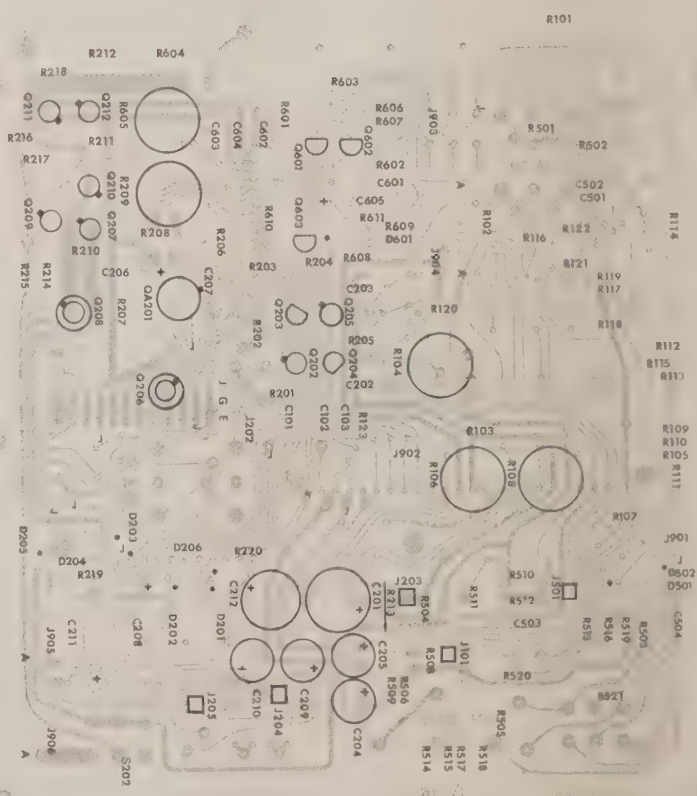

FIGURE 21. Component Layout, PC254

TUBE BOARD, PC-248
Schematics 24688D, 24689D

C301	C22-.0022M	QA313	IC-16
C302	C22-100P	QA314	IC-3
C303	C180-.22M	QA315	IC-3
DS301	PL-42	QA316	IC-3
DS302	PL-48	R301	R2-100K
Q301	TG-67	R302	R76-1.5K
Q302	TG-44	R303	R76-3.3K
Q303	TG-44	R304	R76-1.5K
Q304	TG-65	R305	R76-1.5K
Q305	TG-67	R306	R1-100K
Q306	TG-67	R307	R76-47K
QA301	IC-9	R308	NOT USED
QA302	IC-9	R309	R94-80.6K
QA303	IC-5	R310	R88-7.8K
QA304	IC-5	R311	R76-1K
QA305	IC-7	R312	R76-1.5K
QA306	IC-9	R313	R94-10K
QA307	IC-9	R314	R94-10K
QA308	IC-17	R315	R94-10K
QA309	IC-17	V301	EV-841
QA310	IC-17	V302	EV-841
QA311	IC-16	V303	EV-841
QA312	IC-16		

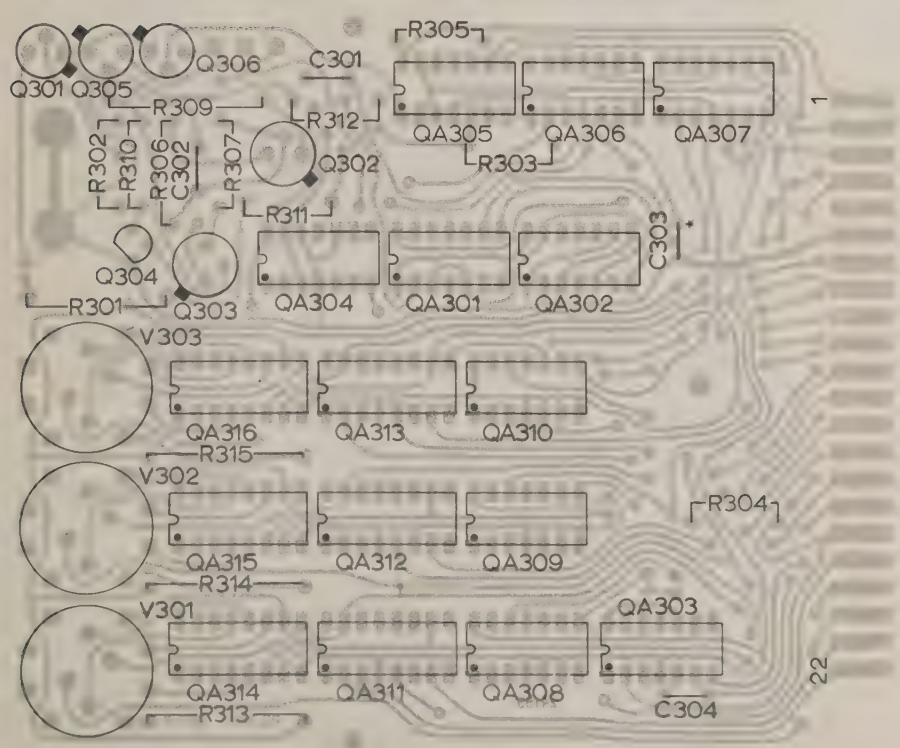

FIGURE 22. Component Layout, PC248

INTEGRATOR BOARD, PC-250
Schematic 24690E

Circuit Desig.	Keithley Part No.	Circuit Desig.	Keithley Part No.
C401	C22-10P	D411	DZ-38
C402	C22-10P	D412	RF-28
C403	C22-100P	D413	RF-28
C404	C179-10M	D414	RF-28
C405	C77-1.5P	D415	RF-28
C406	C185-1M	D416	RF-28
C407	C22-.001M	D417	RF-28
C408	NOT USED	Q401	TG-42
C409	C22-220P	Q402	TG-71
C410	C179-10M	Q403	TG-71
C411	C179-10M	Q404	TG-66
C412	C180-22M	Q405	TG-65
C413	C22-5P	Q406	NOT USED
C414	C85-1M	Q407	NOT USED
C415	C22-.0047M	Q408	TG-42
C416	C22-390P	Q409	TG-42
C417	C179-10M	Q410	TG-65
C418	C178-.1M	Q411	TG-42
C419	C179-10M	Q412	TG-65
C420	C179-10M	Q413	TG-66
D401	DZ-5	Q414	TG-65
D402	DZ-5	Q415	TG-66
D403	TG-39	Q416	TG-65
D404	TG-39	QA401	IC-1
D405	RF-28	QA402	IC-1
D406	RF-28	QA403	IC-4
D407	RF-28	QA404	IC-5
D408	RF-28	R401	R76-10K
D409	RF-28	R402	RP64-10K
D410	RF-28	R403	R88-7.5K

Circuit Desig.	Keithley Part No.	Circuit Desig.	Keithley Part No.
R404	R88-7.5K	R434	R76-100K
R405	R88-7.5K	R435	R76-47
R406	R177- *	R436	R76-47
R407	R76-10K	R437	R76-2.2K
R408	RP64-10K	R438	R76-1.5K
R409	R88-7.5K	R439	R76-47
R410	R88-7.5K	R440	R76-47
R411	R88-7.5K	R441	R88-8.87K
R412	R177- *	R442	R88-3.01K
R413	R177-49.9K	R443	R76-2.2K
R414	R177-49.9K	R444	R88-2.49K
R415	R76-100K	R445	R88-10K
R416	R76-100K	R446	R76-2.2K
R417	R76-1K	R447	R88-237
R418	R88-301K	R448	R76-56K
R419	R88-301K	R449	R88-1K
R420	R76-1.5K	R450	R88-4.99K
R421	R76-680	R451	R76-27K
R422	R76-33K	R452	R76-82K
R423	R76-4.7K	R453	R76-33K
R424	R76-4.7K	R454	R76-680
R425	NOT USED	R455	R88-237
R426	NOT USED	R456	R76-56K
R427	NOT USED	R457	R88-4.99K
R428	R76-680	R458	R76-100K
R429	R76-4.7K		
R430	R76-33K		
R431	R76-3.7K		
R432	R76-100K		
R433	R76-100K		

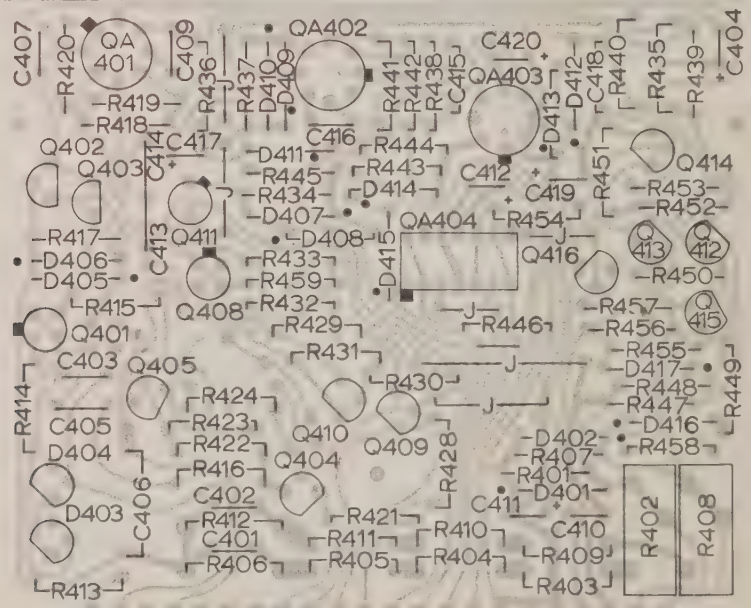

FIGURE 23. Component Layout, PC250

ANALOG AMPLIFIER, PC-251
Schematic 24691E

Circuit Desig.	Keithley Part No.	Circuit Desig.	Keithley Part No.
C701		C712	C22-33P
C702	C47-.01M	C713	C179-10M
C703	C179-10M	C714	C138-150P
C704	C22-.0047M	C715	C138-.001M
C705	C179-1.2M	C716	C196-500P
C706	C179-1.2M	C717	C196-500P
C707	C22-.0047M	C718	C22-.0047M
C708	C22-220P	C719	C22-220P
C709	C178-.1M	C720	C179-10M
C710	C178-.22M	D701	RF-14
C711	C178-.1M	D702	DZ-5
Q701	TG-51 (24598A)	R719	R76-68K
Q702	TG-51 (24598A)	R720	R76-680
Q703	TG-62 (24219A)	R721	R76-680
Q704	TG-61	R722	RP59-500
Q705	TG-41	R723	R76-68K
Q706	TG-62	R724	R76-100K
Q707	TG-62	R725	R76-47
Q708	TG-61	R726	R76-470
QA701	IC-8	R727	R88-4.75K
QA702	IC-1	R728	R88-49.9K
QA703	IC-2	R729	R76-100K
QA704	IC-2	R730	R88-1K
R701	R76-47K	R731	R88-4.75K
R702	R76-1K	R732	R76-10K
R703	R157-100	R733	RP64-50K
R704	R76-1M	R734	R88-49.9K
R705	R76-1K	R735	R88-100K
R706	R88-100K	R736	R76-100K
R707	R76-10K	R737	R88-1K
R708	R76-33K	R738	RP39-2K
R709	R76-3.3K	R739	R168-8.06K
R710	R76-10K	R740	R168-9.9K
R711	R76-1M	R741	R168-100
R712	R76-10K	R742	R168-10K
R713	R76-1.5K	R743	R168-10K
R714	R76-470K	R744	NOT USED
R715	R76-33K	R745	R168-10K
R716	R76-100K	R746	R76-1.5K
R717	R76-56K	R747	R76-47
R718	R76-47K	R748	R76-470

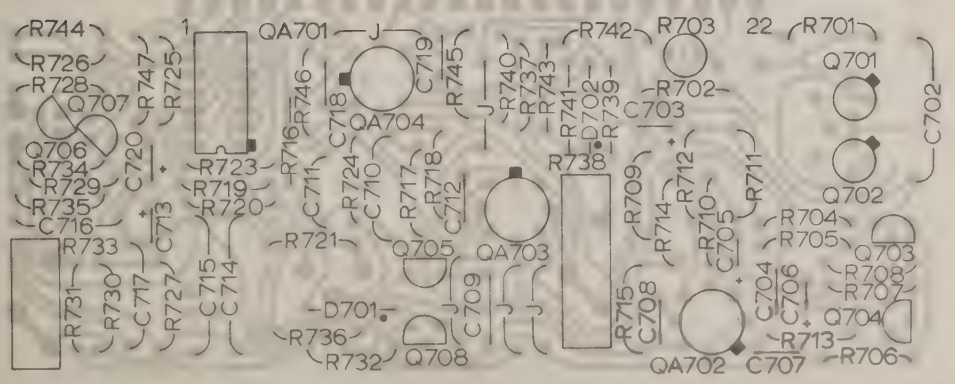

FIGURE 24. Component Layout, PC251

MAIN CHASSIS

MISCELLANEOUS

Keithley Part No.	Quantity Per Assembly	Description	Mfr.	Mfr. Desig.	Circuit Desig.
BP-11R	1	Binding Post, Red	58474	DF21RC	J101
BP-11B	1	" " , Black	"	DF21BC	J102
BP-11G	1	" " , Green	"	DF21GC	J104
CO-7	1	Line Cord	70903	KH7329	-
SW-319A	1	Switch, Rotary RANGE (160)	80164	-	S101
CS-254	1	Receptacle, 3-Pin AC	82389	EAC301	P201
SW-236	1	Switch, Toggle, Power	80164	-	S201
TR-130	1	Transformer	80164	-	T201
CS-32	1	Connector, Analog OUTPUT	02660	80PC2F	J103
24263	1	Mother Board	80164	-	PC-254
24265	1	Connector Board	80164	-	PC-255
24199	1	Tube Board	80164	-	PC-248
24223	1	Integrator Board	80164	-	PC-250
24259	1	Analog Board	80164	-	PC-251
SW-322A		Switch, Rotary RANGE (163)	80164		S101
CS-33	Not Supplied	Connector, Mate of J103	02660	80MC2M	-

TUBE BOARD, PC-248

MISCELLANEOUS

Keithley Part No.	Quantity Per Assembly	Description	Mfr.	Mfr. Desig.	Circuit Desig.
EV-841	3	Tube, Readout	80164	-	V301-303
P1-42	1	Lamp, OVERRANGE	"	-	DS301
PL-48	1	Lamp, POLARITY	"	-	D302

CAPACITORS

C22-10P	1	10pF, 1000V, CerD	71590	DD100-10%	C304
C22-100P	1	100pF	71590	DD101-10%	C302
C22-.0022M	1	.0022μF	72982	811000X5F0222K	C301
C180-.22M	1	.22μF, 10V, ETT	17554	TSD210226	C303

INTEGRATED CIRCUITS

IC-3	3	Decoder/Driver, TO-116	07263	U6B996079X	QA314-316
IC-5	2	Quad 2-input NOR, TO-116	04713	MC824P	QA303, 304
IC-7	1	Hex Inverters, TO-116	04713	MC789P	QA305
IC-9	4	Dual J-K Flip-Flops, TO-116	04713	MC791P	QA301, 302, 306, 307
IC-16	3	Quad Latch, TO-116	04713	MC867P	QA311-313
IC-17	3	Decade Counter, TO-116	04713	MC880P	QA308-310

RESISTORS

R1-100K	1	100KΩ, 10%, 1/2 W, Comp	01121	EB-104-10%	R306
R2-100K	1	100KΩ, 10%, 1 W, Comp	01121	GB-104-10%	R301
R76-1K	1	1K, 10%, 1/4 W, Comp	44655	RC07-102-10%	R311
R76-1.5K	4	1.5KΩ	"	" -152-10%	R302, 304, 305, 312
R76-3.3K	1	3.3KΩ	"	" -332-10%	R303
R76-47K	1	47KΩ	"	" -473-10%	R307
R88-7.87K	1	7.87KΩ, 1%, 1/8 W, MtF	07716	CEA7.8KΩ,1%	R310
R94-10K	3	10KΩ, 1%, 1/2 W, MtF	07716	CEC-103-1%	R313-315
R94-80.6K	1	80.6KΩ	"	" 80.6KΩ,1%	R309

TRANSISTORS

TG-44	2	Silicon, NPN, Case TO-5	02735	40346	Q302, 303
TG-65	1	Silicon, NPN, Case TO-106	07263	2N5134	Q304
TG-67	3	Silicon, NPN, Case TO-104	07263	2N5184	Q301, 305, 306

INTEGRATOR BOARD, PC-250

Keithley Part No.	Quantity Per Assembly	Description	Mfr.	Mfr. Desig.	Circuit Desig.
		DIODES			
DZ-5	2	Diode, Zener	04713	1N936	D401, 402
DZ-38	1	Diode, Zener	04713	1N713A	D411
RF-28	12	Rectifier	01295	1N914	D405-410, 412-417
		CAPACITORS			
C22-5P	1	5pF, 1000V, CerD	71590	DD050-10%	C413
C22-10P	2	10pF	71590	DD100-10%	C401, 402
C22-100P	1	100pF	71590	DD101-10%	C403
C22-220P	1	220pF	71590	DD221-10%	C409
C22-390P	1	390pF	71590	DD391-10%	C416
C22-.001M	1	.001µF	72982	801000X5F0-102K	C407
C22-.0047M	1	.0047µF	56289	10SS-D47	C415
C77-1.5P	1	1.5pF, 600V, CerD	71590	TCZ-15	C405
C85-1.0M	1	1.0µF, 25V, CerD	56289	5C13	C414
C178-0.1M	1	0.1µF, 250V, MtF	73445	C280AE	C418
C179-10M	6	10µF, 20V, ETT	17554	TSD1-20	C404, 410, 411, 417, 419, 420
C180-22M	1	22µF, 10V, ETT	17554	TSD2-10	C412
C185-1.0M	1	1µF, 100V, My	-	MF825	C406
		INTEGRATED CIRCUITS			
IC-1	2	Operational Amplifier, TO-99	07263	U5B770939X	QA401, 402
IC-4	1	Differential Comparator, TO-99	07263	U5B771039X	QA403
IC-5	1	Quad 2-Input NAND, TO-116	04713	MC824P	QA404
		RESISTORS			
R76-47	4	47Ω, 10%, 1/4 W, Comp	44655	RC07-470-10%	R435, 436, 439, 440
R76-680	3	680Ω	"	" -681-10%	R421, 428, 454
R76-1K	1	1KΩ	"	" -102-10%	R417
R76-1.5K	2	1.5KΩ	"	" -152-10%	R420, 428
R76-2.2K	3	2.2KΩ	"	" -222-10%	R437, 443, 446
R76-4.7K	4	4.7KΩ	"	" -472-10%	R423, 424, 429, 431
R76-10K	2	10KΩ	"	" -103-10%	R401, 407
R76-27K	1	27KΩ	"	" -273-10%	R451
R76-33K	3	33KΩ	"	" -333-10%	R422, 430, 453
R76-56K	2	56KΩ	"	" -563-10%	R448, 456
R76-82K	1	82KΩ	"	" -823-10%	R452
R76-100K	6	100KΩ	"	" -104-10%	R415, 416, 432-434, 458
R88-237	2	237Ω, 1%, 1/8 W, MtF	07716	CEA-237Ω,1%	R447, 455
R88-1K	2	1KΩ	"	" -1KΩ,1%	R449, 458
R88-2.49K	1	2.49KΩ	"	" -2.49KΩ,1%	R444
R88-3.01K	1	3.01KΩ	"	" -3.01KΩ,1%	R442
R88-4.99K	2	4.99KΩ	"	" -4.99KΩ,1%	R450, 457
R88-7.5K	6	7.5KΩ	"	" -7.5KΩ,1%	R403-405, 409-411
R88-8.87K	1	8.87KΩ	"	" -8.87KΩ,1%	R441
R88-10K	1	10KΩ	"	" -10KΩ,1%	R445
R88-301K	2	301KΩ	"	" -301KΩ,1%	R418, 419
R177-49.9K	2	49.9KΩ, 1%, 1/8 W, MtF	91637	MFF-1/8-49.9K	R413, 414
R177-*	2	Selected Value (*412k to 453k)	"	" " -412K	R406, 412
RP64-10K	2	10KΩ, 20%, Cermet	73138	77PR10K	R402, 408
		TRANSISTORS			
TG-39	2	NPN, Case TO-106	07263	2N3565	D403, 404
TG-42	3	N-Channel FET	04713	2N4220	Q401, 408, 411
TG-65	5	NPN, Case TO-106	07263	2N5134	Q405, 410, 412, 414, 416
TG-66	4	PNP, Case TO-106	07263	2N5139	Q404, 409, 413, 415
TG-71	1	FET, Case TO-92	01295	T1S70	Q402, 403

Keithley Part No.	Quantity Per Assembly	Description	Mfr.	Mfr. Desig.	Circuit Desig.
		MISCELLANEOUS			
DZ-5	1	Diode, Zener	04713	1N936	D702
RF-14	1	Rectifier	01295	1N645	D701
		CAPACITORS			
C22-33P	1	33pF, 600V, Type CerD	71590	DD330-10%	C712
C22-220P	2	220pF	71590	DD221-10%	C708, 719
C22-.0047M	3	.0047 µF	56289	10SS-D47	C704, 707, 718
C47-.01M	1	.01µF, 200V, Type My	13050	SM1A-.01µF	C702
C138-150P	1	150pF, 500V, Type Poly	71590	CPR-150pF	C714
C138-.001M	1	.001µF	71590	CPR-.001µF	C715
C178-.22M	1	.22µF, 250V, Type MtF	73445	C280AE-.22µF	C710
C178-.1M	2	.1µF	73445	C280AE	C709, 711
C179-1.2M	2	1.2µF, 20V, Type ETT	17554	TSD1-20-1.2µF	C705, 706
C179-10M	3	10µF	"	" -10µF	C703, 713, 720
C196-510P	2	510pF, 160V, Type Poly	24972	KS50025160	C716, 717
		INTEGRATED CIRCUITS			
IC-1	1	Operational Amplifier, TO-99	07263	U5B770939X	QA702
IC-2	2	" " "	12040	LM301AH	QA703, 704
IC-8	1	Dual J-K Flip Flop, TO-116	04713	MC890P	QA701
		RESISTORS			
R76-47	2	47Ω, 10%, 1/4 W, Comp	44655	RC07-470-10%	R725, 747
R76-470	2	470Ω	"	" -471-10%	R726, 748
R76-680	2	680Ω	"	" -681-10%	R720, 721
R76-1K	2	1KΩ	"	" -102-10%	R702, 705
R76-1.5K	2	1.5KΩ	"	" -152-10%	R713, 746
R76-3.3K	1	3.3KΩ	"	" -332-10%	R709
R76-10K	4	10KΩ	"	" -103-10%	R707, 710, 712, 732
R76-33K	2	33KΩ	"	" -333-10%	R708, 715
R76-47K	2	47KΩ	"	" -473-10%	R701, 718
R76-56K	1	56KΩ	"	" -563-10%	R717
R76-68K	2	68KΩ	"	" -683-10%	R719, 723
R76-100K	4	100KΩ	"	" -104-10%	R711, 716, 724, 736
R76-470K	1	470KΩ	"	" -474-10%	R714
R76-1M	1	1MΩ	"	" -105-10%	R704
R88-1K	2	1KΩ, 1%, 1/8 W, MtF	07716	CEA -1KΩ,1%	R730, 737
R88-4.75K	2	4.75KΩ	"	" 4.75KΩ,1%	R727, 731
R88-49.9K	2	49.9KΩ	"	" 49.9KΩ,1%	R728, 734
R88-100K	3	100KΩ	"	" 100KΩ,1%	R706, 729, 735
R157-100	1	100Ω, .05%, 1/4 W, WW	17870	1352-100Ω	R703
R168-100	1	100Ω, 0.1%, 1/8 W, MtF	91637	MFF-1/8-100Ω	R741
R168-8.06K	1	8.06KΩ (Nom)	"	" -1/8-8.06KΩ	R739
R168-10K	3	10KΩ	"	" -1/8-10KΩ	R742, 743, 745
R168-9.9K	1	9.9KΩ	"	" -1/8-9.9KΩ	R740
RP64-2K	1	2KΩ, 20%, 0.75 W, Cermet	73138	77PR-2KΩ	R738
RP59-500	1	500Ω, 1/4 W, Carbon	76055	MTC52LI-500Ω	R722
RP64-50K	1	50KΩ, 20%, 0.75 W, Cermet	73138	77PR-50KΩ	R733
		TRANSISTORS			
TG-41	1	N-Channel FET	04713	MPF-103	Q705
TG-51 (24598A)	2	N-Channel FET Selected	94145	RN1030	Q701, 702
TG-61	2	PNP, Case TO-92	04713	2N5087	Q704, 708
TG-62	2	NPN, Case TO-92	04713	2N5089	Q706, 707
TG-62 (24219A)	1	NPN, Case TO-92 Selected	04713	2N5089	Q703

MOTHER BOARD, PC-254

MISCELLANEOUS

Keithley Part No.	Quantity Per Assembly	Description	Mfr.	Mfr. Desig.	Circuit Desig.
CS182	2	Connector, 22-Pin	09922	PSC4SS2212	J901, 902
FU-33	1	Fuse, 1/4 A, 250V	71400	MDV	F202
FU-35	1	Fuse, 1/2 A, 250V	71400	MDV	F201
IC-14	1	Integrated Circuit,Regulator,10-Pins	07263	U5R772339	QA201
SW318	1	Switch, 117-234V	79727	GG350PC	S202

CAPACITORS

C3-125M	2	125μF, 15V, Type ETB	73445	C426	C208, 211
C22-150P	1	150pF, 1000V, Type CerD	71590	DD-151-10%	C203
C22-220P	1	220pF	71590	DD-221-10%	C202
C22-470P	1	470pF	71590	DD-471-10%	C207
C22-.0047M	3	.0047μF	56289	10SS-D47	C101, 102, 103
C22-.01M	1	.01μF	56289	10SS-510	C504
C93-2000M	1	2000μF, 15V, EAL	29309	3675020015C	C201
C143-.047M	1	.047μF, 200V, Type My	13050	SM2A	C601
C143-.1M	2	.1μF	"	"	C501, 507
C173-15M	1	15μF, 300V, Type EAL	90201	PTC015M300	C212
C177-200M	4	200μF, 35V, Type EAL	90201	MTV200N35	C204, 205, 209, 210
C179-10M	2	10μF, 20V, Type ETT	17554	TSD1-20	C206, C605
C188-2M	1	2μF, 100V, Type My	-	MF1195	C503
C209-500P	2	500pF, 500V, Type Silver Mica	14655	CD19FD501F03	C602, 603
C209-1500P	1	1500pF	14655	CD19FD152F03	C604

RESISTORS

R1-10	1	10Ω, 10%, 1/2 W, Type Comp	01121	EB-100-10%	R213
R1-82	1	82Ω	"	"-820-10%	R219
R1-10K	1	10KΩ	"	"-103-10%	R502
R1-150K	1	150KΩ	"	"-154-10%	R501
R12-1	2	1Ω, 1%, 1/2 W, Type DCb	91637	DCF-1/2-1Ω	R520, 521
R12-3	2	3Ω	"	" " -3Ω	R206, 215
R13-10^7	1	10^7Ω, 1%, 1 W, Type DCb	"	DC-1-10^7Ω	R112
R14-10^8	1	10^8Ω, 1%, 2 W, Type DCb		DC-2-10^8Ω	R114
R37-10^8	1	10^8Ω, 20%, 1/2 W, Type Comp	75042	GBT-10^8Ω	R511
R37-10^9	2	10^9Ω	"	" -10^9Ω	R512, 113
R76-10	2	10Ω, 10%, 1/4 W, Type Comp	44655	RC07-100-10%	R517, 518
R76-47	1	47Ω	"	" -470-10%	R610
R76-220	1	220Ω	"	" -221-10%	R123
R76-1K	1	1KΩ	"	" -102-10%	R205
R76-1.5K	1	1.5KΩ	"	" -152-10%	R608
R76-1.8K	1	1.8KΩ	"	" -182-10%	R207
R76-3.9K	1	3.9KΩ	"	" -392-10%	R609
R76-6.8K	1	6.8KΩ	"	" -682-10%	R201
R76-15K	1	15KΩ	"	" -153-10%	R211
R76-33K	3	33KΩ	"	" -333-10%	R214, 216, 217
R76-1M	1	1MΩ	"	" -105-10%	R220
R76-10M	1	10MΩ	"	" -106-10%	R510
R88-100	3	100Ω, 1%, 1/8 W, Type MtF	07716	CEA-100Ω-1%	R603, 514, 515
R88-1.5K	2	1.5KΩ	"	" -1.5KΩ-1%	R508, R509
R88-2.49K	1	2.49KΩ	"	" 2.49KΩ-1%	R204

MOTHER BOARD, PC-254 (cont'd)

RESISTORS (cont'd)

Keithley Part No.	Quantity Per Assembly	Description	Mfr.	Mfr. Desig.	Circuit Desig.
R88-3.01K	2	3.01KΩ, 1%, 1/8 W, Type MtF	07716	CEA-3.01KΩ,1%	R210, R601
R88-3.32K	1	3.32KΩ	"	" -3.32KΩ,1%	R208
R88-7.5K	2	7.5KΩ	"	" -7.5KΩ,1%	R212, 218
R88-10K	2	10KΩ	"	" 10KΩ,1%	R203, 611
R88-49.9K	2	49.9KΩ	"	" 49.9KΩ,1%	R504, 506
R88-100K	1	100KΩ, 1%, 1/8 W, Type MtF	"	" 100KΩ,1%	R110
R88-113K	1	113KΩ	"	" 113KΩ,1%	R602
R88-1M	1	1MΩ	"	" 1MΩ,1%	R503
R94-200K	1	200KΩ, 1%, 1/2 W, Type MtF	07716	MEH-200KΩ	R102
R95-1	1	1Ω, 0.1%, 1/4 W, Type WW	01686	7009-1Ω	R121
R95-10	1	10Ω	"	" -10Ω	R122
R151-.2	1	.2Ω, 10%, Type Comp	44655	RC07-.2Ω	R202
R167-.1	1	.1Ω, 0.1%, 5 W, Type WW	02985	TS-5W-.1Ω	R120
R168-6.98K	1	6.98KΩ, 0.1%, 1/8 W, Type MtF	91637	MFF-6.98KΩ	R604
R168-32.4K	2	32.4KΩ	"	" -32.4KΩ	R606, 607
R169-99.9	1	99.9Ω, 0.1%, 1/2 W, Type MtF	91637	MFF-99.9Ω	R119
R169-899	1	899Ω	"	" -899Ω	R519
R169-1K	2	1KΩ	"	" -1KΩ	R118, 103
R169-8.99K	1	8.99KΩ	"	" -8.99KΩ	R516
R169-10K	2	10KΩ	"	" 10KΩ	R117, R105
R169-89.90K	1	89.90KΩ, 0.1%, 1/2 W, Type MtF	"	" 89.90KΩ	R513
R169-100K	2	100KΩ	"	" 100KΩ	R107, 116
R169-1M	2	1MΩ	"	" 1MΩ	R109, 115
R170-10M	1	10MΩ, 1%, 1/2 W, Type MtF	07716	MEH-10MΩ	R101

DIODES

RF-14	4	Silicon	01295	1N645	D204, 205, 501, 502
RF-22	1	Silicon	01295	1N3255	D206
RF-28	1	Silicon	01295	1N914	D601
RF-34	2	Silicon	13327	1N4139	D201, 202
RF-36	1	Full wave bridge	83701	PD-10	D203

VARIABLE RESISTORS

RP50-50	1	50Ω, 20%, 2 W, Type WW	71450	1NS-115	R104
RP50-500	1	500Ω	"	"	R106
RP50-1K	1	1KΩ	"	"	R209
RP50-5K	2	5KΩ	"	"	R108, 605
RP64-50K	1	50KΩ, 20%, 1.75 W, Cermet	73138	77PR	R111
RP64-100K	1	100KΩ	"	"	R505

TRANSISTORS

TG-33	6	Silicon, PNP, Case R110	07263	S17638	Q205, 207, 209-212
TG-39	2	Silicon, NPN, Case TO-106	07263	2N3565	Q203, 204
TG-43	1	Silicon, NPN, Case TO-5	02734	40317	Q206
TG-50	1	Silicon, NPN, Case TO-5	02734	40319	Q208
TG-62	3	Silicon, NPN, Case TO-92	04713	2N5089	Q601, 602, 603
TG-68	1	Silicon, NPN, Case TO-104	02734	2N5183	Q202

Model 1602 Digital Output, PC-287.

CAPACITORS

Circuit Desig.	Value	Rating	Type	Mfr. Code	Mfr. Part No.	Keithley Part No.
C1001	1.2 µF	20 V	ETT	17554	TSD1-20	C179-1.2M
C1002	.001 µF	1000 V	CerD	72982	801000X5F0102K	C22-.001M
C1003	.0022 µF	1000 V	CerD	72982	811000X5F0222K	C22-.0022M

CONNECTORS

Circuit Desig.	Type	Mfr. Code	Mfr. Part No.	Keithley Part No.
J1001	Receptacle, 10-Pin	22526	20052	CS-237
J1002	Receptacle, 10-Pin	22526	20052	CS-237
J1003	Receptacle, 10-Pin	22526	20052	CS-237
J1004	Receptacle, 22-Pin	09922	PSC4SS2212	CS-182
J1005	Receptacle, 44-Pin	09922	PSC4DD2212	CS-205
J1006	Receptacle, 50-Pin	02660	57405001	CS-221
	Plug, Mate of J1006, (Not Supplied)	02660	57305001	CS-220

DIODES

Circuit Desig.	Type	Mfr. Code	Mfr. Part No.	Keithley Part No.
D1001	Germanium	15238	1N87	RF-39
D1002	Germanium	15238	1N87	RF-39
D1003	Germanium	15238	1N87	RF-39
D1004	Germanium	15238	1N87	RF-39
D1005	Germanium	15238	1N87	RF-39
D1006	Silicon	01295	1N914	RF-28
D1007	Silicon	01295	1N914	RF-28
D1008	Silicon	01295	1N914	RF-28
D1009	Silicon	01295	1N914	RF-28
D1010	Silicon	01295	1N914	RF-28
D1011	Silicon	01295	1N914	RF-28
D1012	Silicon	01295	1N914	RF-28

INTEGRATED CIRCUITS

Circuit Desig.	Type	Mfr. Code	Mfr. Part No.	Keithley Part No.
QA1001	Quad, NAND Gate, 14-Pin DIP, TO-116	04713	MC858P	IC-22
QA1002	Quad, NAND Gate, " " "	04713	MC858P	IC-22
QA1003	Quad, NAND Gate, " " "	04713	MC858P	IC-22
QA1004	Quad, NAND Gate, " " "	04713	MC858P	IC-22
QA1005	Inverter-Flip-Flop, 14-Pin DIP, TO-116	04713	MC887P	IC-23
QA1006	Quad, NAND Gate, 14-Pin DIP, TO-116	04713	MC858P	IC-22
QA1007	Quad, NAND Gate, " " "	04713	MC858P	IC-22
QA1008	Binary Counter, 14-Pin DIP, TO-116	04713	MC877P	IC-21

Model 1602 Digital Output, PC-287.

RESISTORS

Circuit Desig.	Value	Rating	Type	Mfr. Code	Mfr. Part No.	Keithley Part No.
R1001	3.3 KΩ	10%, 1/4 W	Comp	44655	RC07-332-10%	R76-3.3K
R1002	1.5 KΩ	10%, 1/4 W	Comp	44655	RC07-152-10%	R76-1.5K
R1003	1.5 KΩ	10%, 1/4 W	Comp	44655	RC07-152-10%	R76-1.5K
R1004	3.3 KΩ	10%, 1/4 W	Comp	44655	RC07-332-10%	R76-3.3K
R1005	1.5 KΩ	10%, 1/4 W	Comp	44655	RC07-152-10%	R76-3.3K
R1006	1 KΩ	10%, 1/4 W	Comp	44655	RC07-102-10%	R76-1K
R1007	560 KΩ	10%, 1/4 W	Comp	44655	RC07-561-10%	R76-560
R1008	10 KΩ	10%, 1/8 W	Comp	01121	BB-103-10%	R143-10K
R1009	10 KΩ	10%, 1/8 W	Comp	01121	BB-103-10%	R143-10K
R1010	100 KΩ	10%, 1/4 W	Comp	44655	RC07-104-10%	R76-100K
R1011	27 KΩ	10%, 1/4 W	Comp	44655	RC07-273-10%	R76-27K
R1012	15 KΩ	10%, 1/4 W	Comp	44655	RC07-153-10%	R76-15K
R1013	47 KΩ	10%, 1/4 W	Comp	44655	RC07-473-10%	R76-47K
R1014	15 KΩ	10%, 1/4 W	Comp	44655	RC07-153-10%	R76-15K
R1015	8.45 KΩ	1%, 1/8 W	MtF	07716	CEA-8.45KΩ	R88-8.45K
R1016	100 KΩ	10%, 1/4 W	Comp	44655	RC07-104-10%	R76-100K
R1017	27 KΩ	10%, 1/4 W	Comp	44655	RC07-273-10%	R76-27K
R1018	15 KΩ	10%, 1/4 W	Comp	44655	RC07-153-10%	R76-15K
R1019	10 KΩ	10%, 1/4 W	Comp	44655	RC07-103-10%	R76-10K
R1020	10 KΩ	10%, 1/4 W	Comp	44655	RC07-103-10%	R76-10K

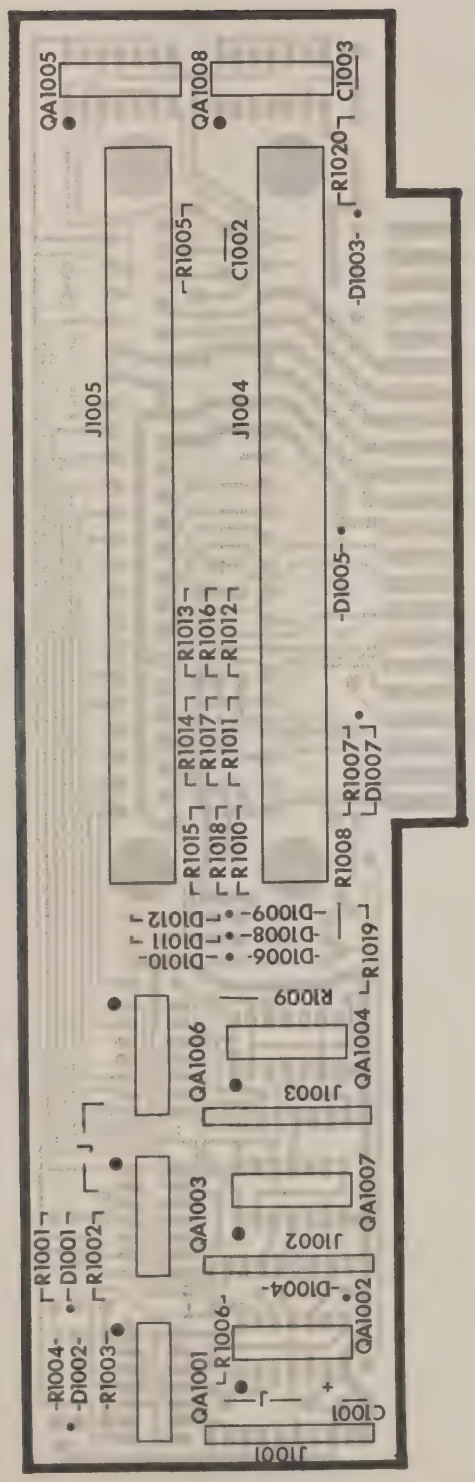

Component Designations, PC-287.

FIGURE 25. Model 1602 Digital Output.

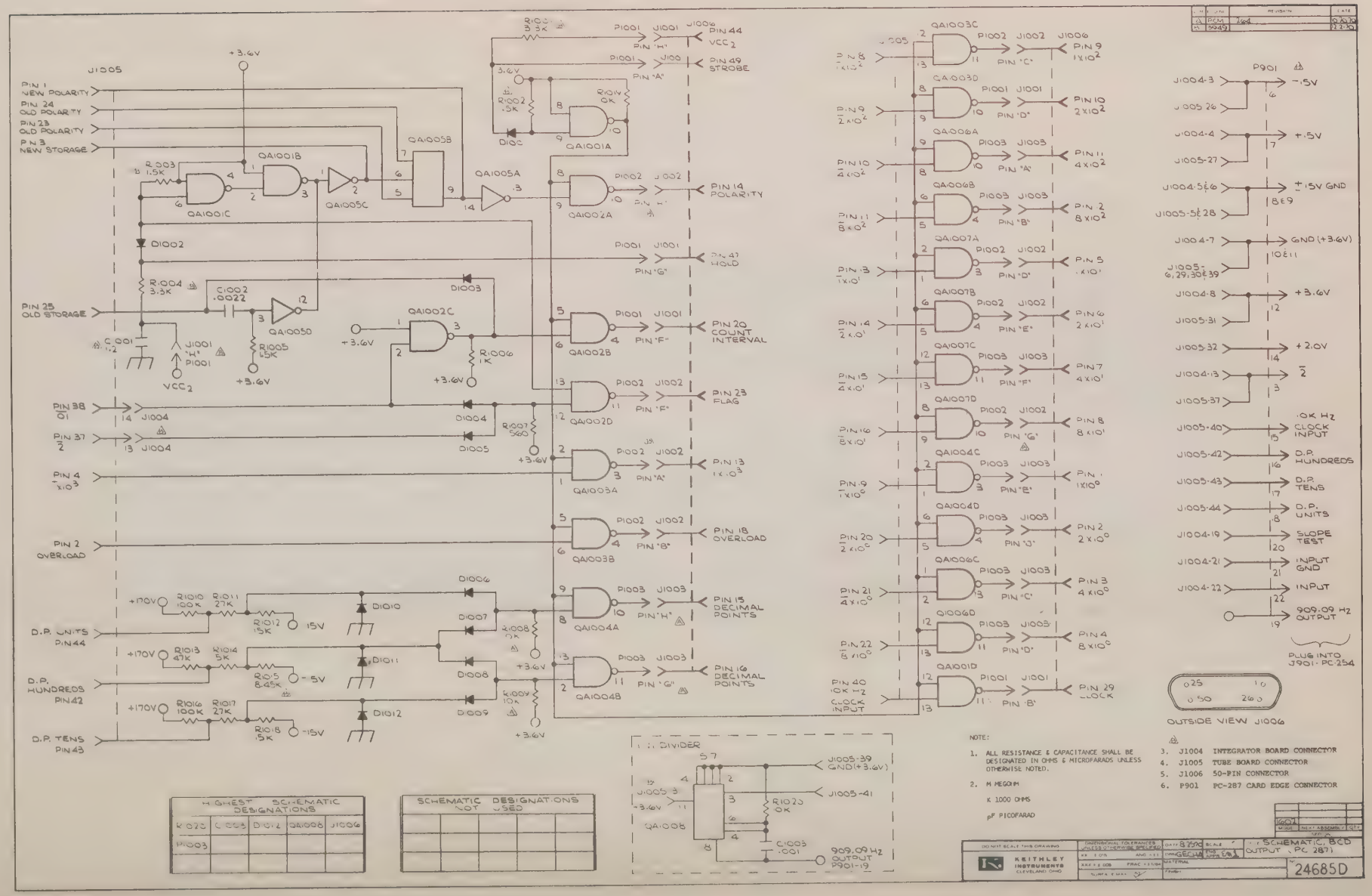
J1005
PIN 1 NEW POLARITY
PIN 24 OLD POLARITY
PIN 23 OLD POLARITY
PIN 3 NEW STORAGE
PIN 25 OLD STORAGE
PIN 38 01
PIN 37 2
PIN 4 1X10^3
PIN 2 OVERLOAD
D.P. UNITS PIN 44
D.P. HUNDREDS PIN 42
D.P. TENS PIN 43
PIN 44 VCC2
PIN 49 STROBE
PIN 14 POLARITY
PIN 47 HOLD
PIN 20 COUNT INTERVAL
PIN 23 FLAG
PIN 13 1X10^3
PIN 18 OVERLOAD
PIN 15 DECIMAL POINTS
PIN 16 DECIMAL POINTS
PIN 40 10K HZ CLOCK INPUT
PIN 29 CLOCK
PIN 9 1X10^2
PIN 10 2X10^2
PIN 11 4X10^2
PIN 2 8X10^2
PIN 5 1X10^1
PIN 6 2X10^1
PIN 7 4X10^1
PIN 8 8X10^1
PIN 1 1X10^0
PIN 2 2X10^0
PIN 3 4X10^0
PIN 4 8X10^0
PIN 29 CLOCK
P901
-15V
+15V
±15V GND
GND (+3.6V)
+3.6V
+2.0V
10K HZ CLOCK INPUT
D.P. HUNDREDS
D.P. TENS
D.P. UNITS
SLOPE TEST
INPUT GND
INPUT
909.09 HZ OUTPUT
PLUG INTO J901-PC-254
OUTSIDE VIEW J1006
DIVIDER
J1005-39 GND(+3.6V)
J1005-41
909.09 HZ OUTPUT P901-19
HIGHEST SCHEMATIC DESIGNATIONS
SCHEMATIC DESIGNATIONS NOT USED
NOTE:
1. ALL RESISTANCE & CAPACITANCE SHALL BE DESIGNATED IN OHMS & MICROFARADS UNLESS OTHERWISE NOTED.
2. M MEGOHM
K 1000 OHMS
pF PICOFARAD
3. J1004 INTEGRATOR BOARD CONNECTOR
4. J1005 TUBE BOARD CONNECTOR
5. J1006 50-PIN CONNECTOR
6. P901 PC-287 CARD EDGE CONNECTOR
DO NOT SCALE THIS DRAWING
KEITHLEY INSTRUMENTS CLEVELAND OHIO
SCHEMATIC, BCD OUTPUT (PC 287)
24685D

KEITHLEY PART NO. IC-1,2

TO-99

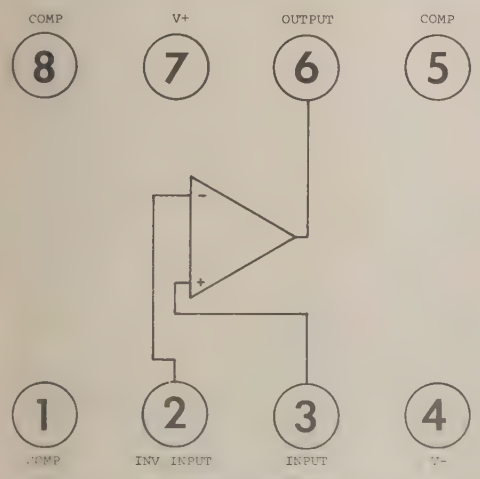

OPERATIONAL AMPLIFIER

KEITHLEY PART NO. IC-3

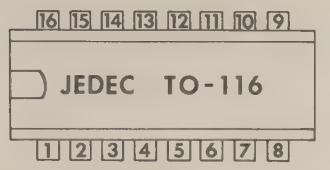

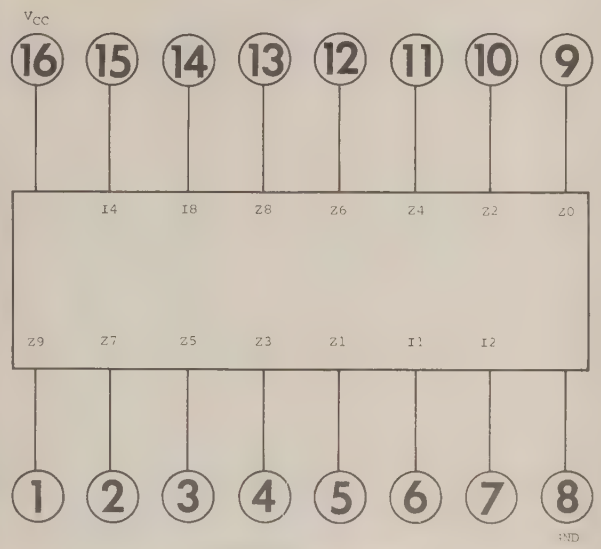

DECIMAL DECODER/DRIVER

KEITHLEY PART NO. IC-4

TO-99

DIFFERENTIAL AMPLIFIER

KEITHLEY PART NO. IC-5

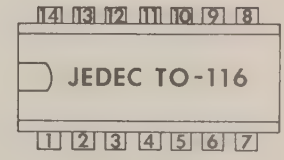

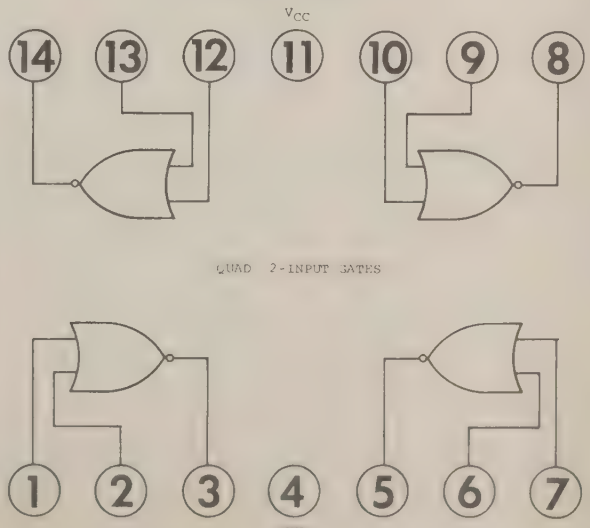

QUAD 2-INPUT GATES

KEITHLEY PART NO. IC-7

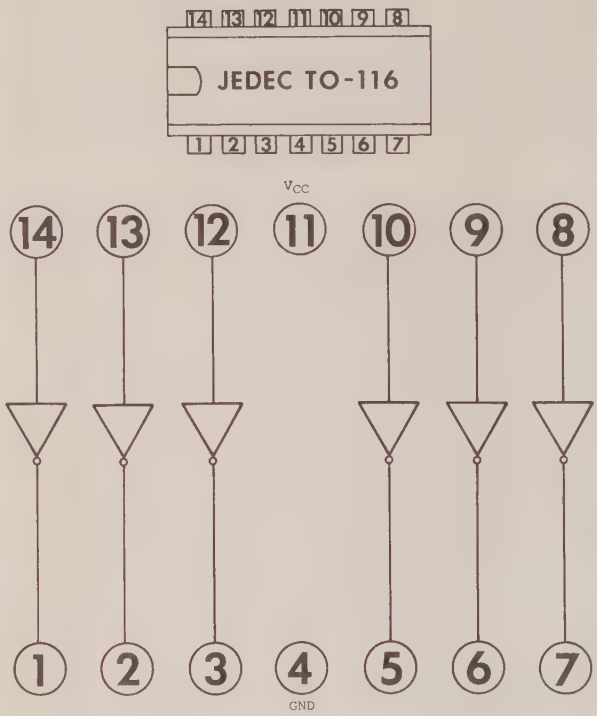

HEX INVERTER AMPLIFIER

KEITHLEY PART NO. IC-8,9

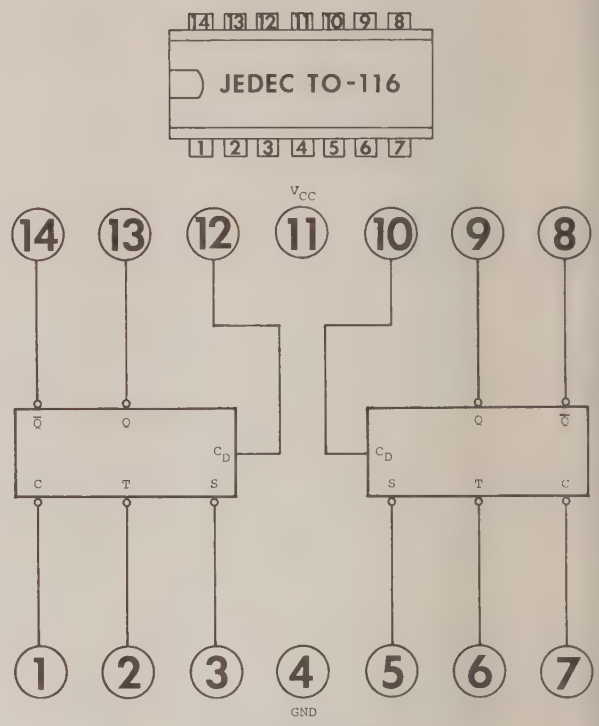

DUAL J-K FLIP FLOPS

KEITHLEY PART NO. IC-14

TO-100

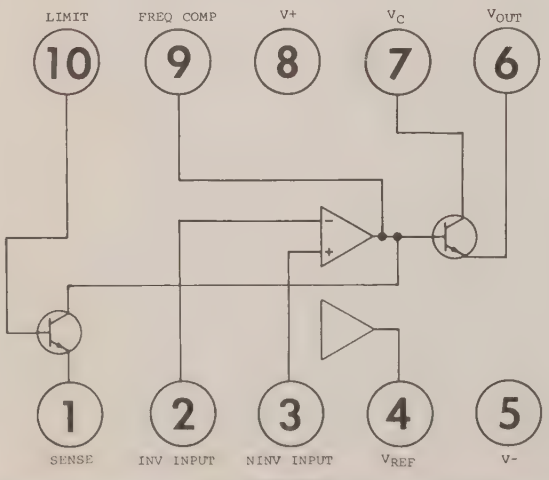

REGULATOR

KEITHLEY PART NO. IC-16

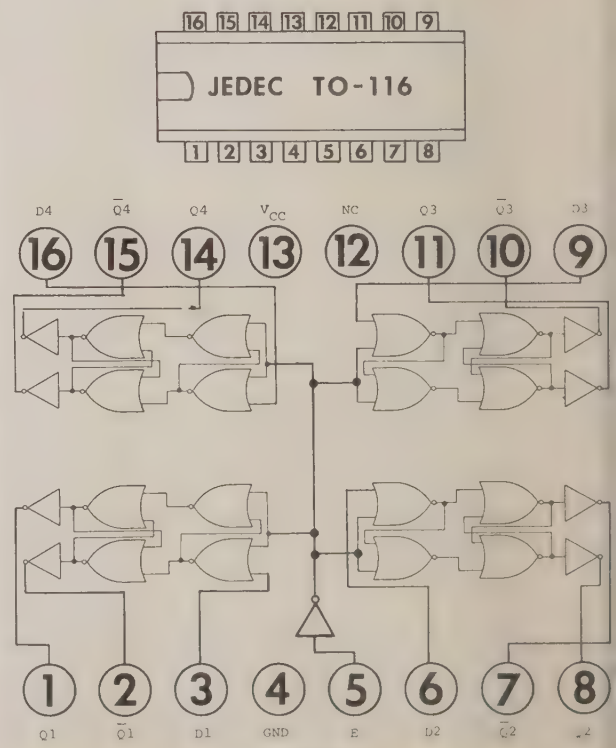

QUAD LATCH

PLATE NO 160B

KEITHLEY PART NO. IC-17

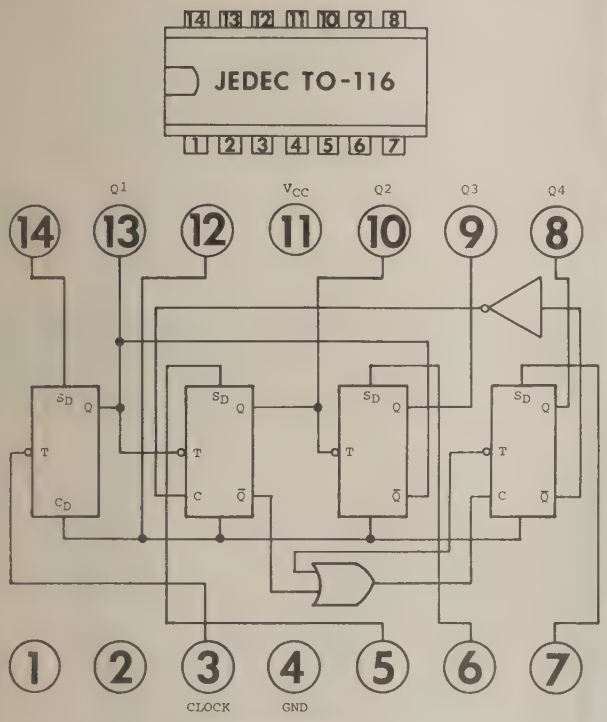

DECADE UP COUNTER

KEITHLEY PART NO. IC-21

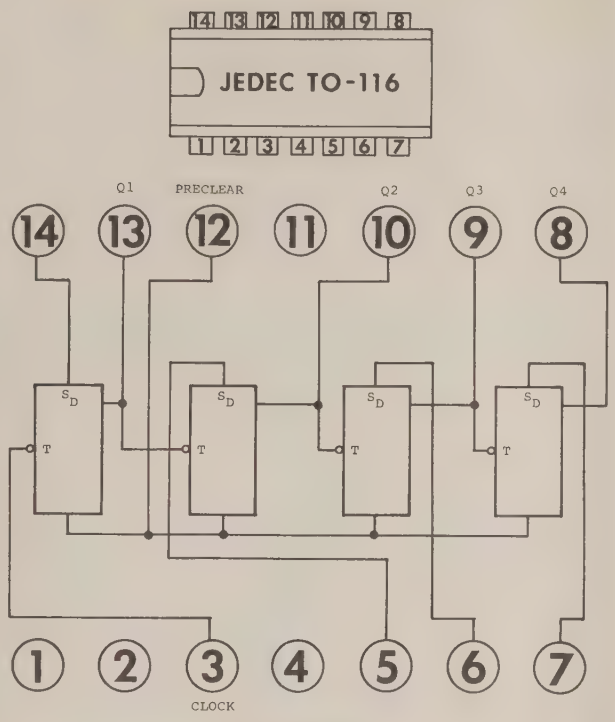

BINARY COUNTER

KEITHLEY PART NO. IC-22

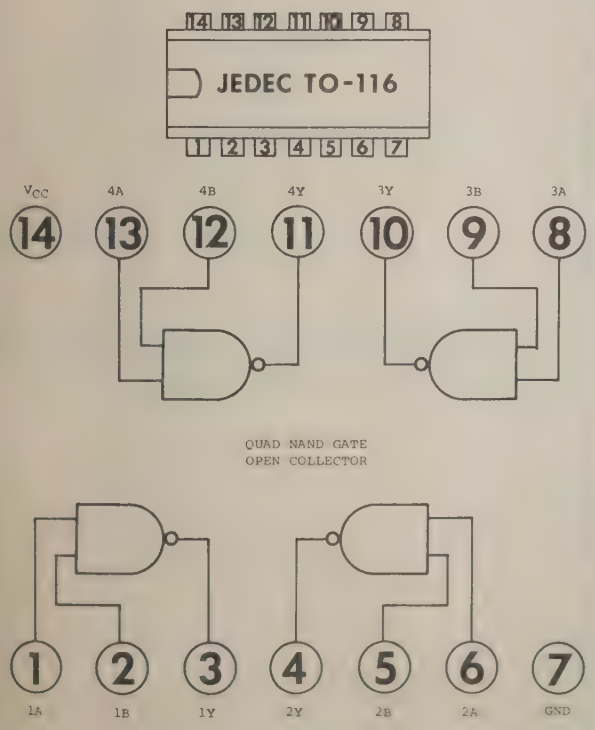

QUAD NAND GATE
OPEN COLLECTOR

KEITHLEY PART NO. IC-23

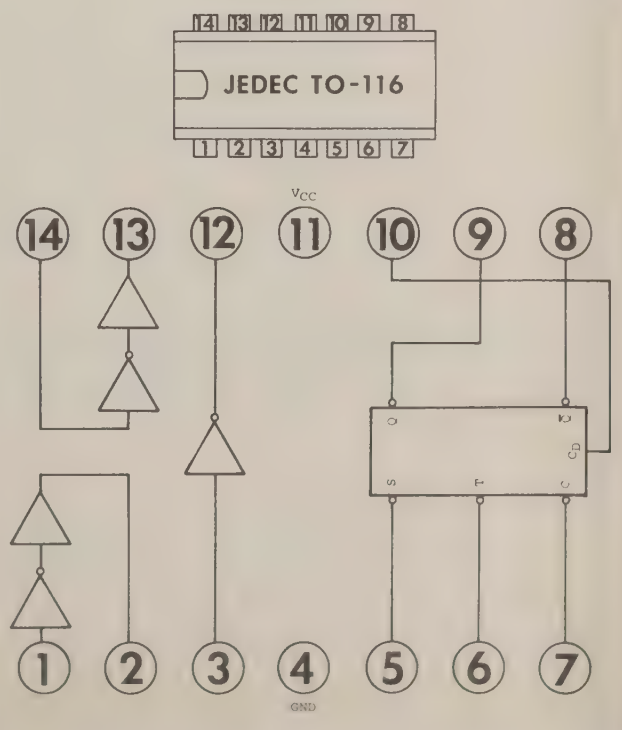

PLATE NO 160D

LEAD DESIG. TO-5

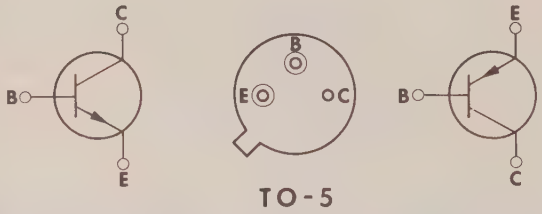

LEAD DESIG. TO-92

LEAD DESIG. TO-104

LEAD DESIG. TO-106

LEAD DESIG. TO-66

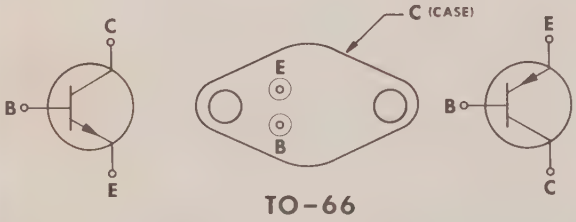

KEITHLEY PART NO. TG-42

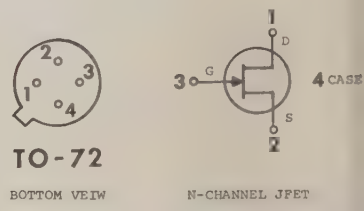

KEITHLEY PART NO. TG-51

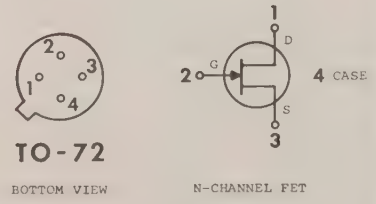

KEITHLEY PART NO. TG-33

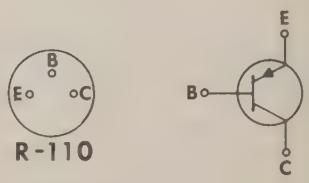

CODE TO NAME List of Suggested Manufacturers.
Reference: Federal Supply Code for Manufacturers, Cataloging Handbook H4-2.

00656	Aerovox Corp. 740 Belleville Ave. New Bedford, Mass. 02741
00686	Film Capacitors, Inc. 100 Eighth St. Passaic, N.J.
01121	Allen-Bradley Corp. 1201 South 2nd St. Milwaukee, Wisc. 53204
01295	Texas Instruments, Inc. Semiconductor-Components Div. Dallas, Texas 75231
01686	RCL Electronics, Inc. 195 McGregor St. Manchester, N.H. 03102
02101	Varo Inc. Electrokinetics Div. Santa Barbara, Calif. 93102
02660	Amphenol Corp. 2801 South 25th Ave. Broadview, Ill. 60153
02734	Radio Corp. of America Defense Electronic Products Camden, N.J.
02735	Radio Corp. of America Receiving Tube Div. Somerville, N.J.
02777	Hopkins Engineering Co. 12900 Foothill Blvd. San Fernando, Calif. 91342
02985	Tepro Electric Corp. 5 St. Paul St. Rochester, N.Y. 14604
03508	General Electric Co. Semiconductor Products Dept. Syracuse, N.Y. 13201
04009	Arrow-Hart & Hegeman Electric Co. 103 Hawthorne St. Hartford, Conn. 06106
04713	Motorola Semiconductor Prod. Inc. 5005 E. McDowell Rd. Phoenix, Ariz. 85008
05079	Tansistor Electronics, Inc. 1000 West Road Bennington, Vt. 05201
05397	Union Carbide Corp. Electronics Div. New York, N.Y. 10017
06751	Components, Inc. Arizona Div. Phoenix, Ariz. 85019
06980	Varian Assoc. EIMAC Div. 301 Industrial Way San Carlos, Calif. 94070
07137	Transistor Electronics Corp. Hwy. 169 - Co. Rd. 18 Minneapolis, Minn. 55424
07263	Fairchild Camera & Inst. Corp. 313 Frontage Road Mountain View, Calif.
07716	IRC, Inc. 2850 Mt. Pleasant Burlington, Iowa 52601
08811	GL Electronics Div. of GL Industries, Inc. Westville, N.J. 08093
09052	Gulton Industries, Inc. Alkaline Battery Div. Metuchen, N.J.
09823	Burgess Battery Co. Div. of Servel Inc. Freeport, Ill.
09922	Burndy Corp. Richards Ave. Norwalk, Conn. 06852
10582	CTS of Asheville Inc. Mills Gap Road Skyland, N.C.
11502	IRC Inc. Greenway Road Boone, N.C. 28607
11837	Electro Scientific Indus., Inc. 13645 NW Science Park Dr. Portland, Or. 97229
12040	National Semiconductor Corp. Commerce Drive Danbury, Conn. 06813
12065	Transitron Electronic Corp. 144 Addison St. East Boston, Mass.
12697	Clarostat Mfg. Co., Inc. Lower Washington St. Dover, N.H. 03820
12954	Dickson Electronics Corp. 302 S. Wells Fargo Ave. Scottsdale, Ariz.
13050	Potter Co. Highway 51 N. Wesson, Miss. 39191
13327	Solitron Devices, Inc. 256 Oak Tree Road Tappan, N.Y. 10983
13934	Midwec Corp. 602 Main Oshkosh, Nebr. 69154
14655	Cornell-Dubilier Electric Corp. 50 Paris Street Newark, N.J.
14659	Sprague Electric Co. P.O. Box 1509 Visalia, Calif. 93278
15238	ITT Semiconductors Div. of ITT Corp. Lawrence, Mass. 01841
15909	Daven Div. of T.A. Edison Ind. McGraw Edison Co. Livingston, N.J.
16170	Teledyne Systems Co. Communications Div. Los Angeles, Calif. 90066
17554	Components, Inc. Smith St. Biddeford, Ma. 04005
23020	General Reed Co. 174 Main St. Metuchen, N.J. 08840
24655	General Radio Co. 22 Baker Ave. West Concord, Mass. 01781
27682	Hathaway Instruments, Inc. 5800 E. Jewell Ave. Denver, Colorado 80222
28520	Heyman Mfg. Co. 147 N. Michigan Ave. Kenilworth, N.J.
29309	Richey Electronics Inc. 1307 Dickerson Rd. Nashville, Tenn. 37213
35529	Leeds and Northrup 4901 Stenton Ave. Philadelphia, Pa. 19144
37942	Mallory, P. R. and Co., Inc. 3029 E. Washington St. Indianapolis, Ind. 46206
44655	Ohmite Mfg. Co. 3601 Howard St. Skokie, Ill. 60076
53201	Sangamo Electric Co. 1301 North 11th Springfield, Ill. 62705
54294	Shallcross Mfg. Co. 24 Preston St. Selma, N.C.
56289	Sprague Electric Co. North Adams, Massachusetts
58474	Superior Electric Co., The 383 Middle St. Bristol, Conn. 06012
61637	Union Carbide Corp. 270 Park Ave. New York, N.Y. 10017

CODE TO NAME List (Continued).

63060	Victoreen Instrument Co. 5806 Hough Ave. Cleveland, Ohio 44103
70309	Allied Control Co., Inc. 2 East End Ave. New York, N.Y.
70903	Belden Mfg. Co. 415 So. Kilpatrick Chicago, Ill. 60644
71002	Birnbach Radio Co., Inc. 147 Hudson St. New York, N.Y.
71279	Cambridge Thermionic Corp. 430 Concord Avenue Cambridge, Mass.
71400	Bussmann Mfg. Div. of McGraw-Edison Co. St. Louis, Mo.
71450	CTS Corp. 1142 W. Beardsley Ave. Elkhart, Ind.
71468	ITT Cannon Electric, Inc. 3208 Humbolt St. Los Angeles, Calif. 90031
71590	Centralab Div. of Globe-Union, Inc. Milwaukee, Wisc. 53212
71785	Cinch Mfg. Co. and Howard B. Jones Div. Chicago, Ill. 60624
72619	Dialight Corp. 60 Stewart Ave. Brooklyn, N.Y. 11237
72653	G-C Electronics Co. 400 S. Wyman Rockford, Ill. 61101
72699	General Instrument Corp. Capacitor Division Newark, N.J. 07104
72982	Erie Technological Prods Inc. 644 W. 12th St. Erie, Pa. 16512
73138	Beckman Instruments, Inc. Helipot Division Fullerton, Calif. 92634
73445	Amperex Electronic Co., Div. of North American Philips Co., Inc. Hicksville, N.Y.
73690	Elco Resistor Co. 1158 Broadway New York, N.Y.
74276	Signalite Inc. 1933 Heck Ave. Neptune, N.J. 07753
74970	Johnson, E. F., Co. 297 Tenth Ave. S.W. Waseca, Minn. 56093
75042	IRC Inc. 401 North Broad St. Philadelphia, Pa. 19108
75915	Littlefuse, Inc. 800 E. Northwest Hwy. Des Plaines, Ill. 60016
76055	Mallory Controls, Div. of Mallory P. R. & Co., Inc. Frankfort, Ind.
76493	Miller, J. W. Co. 5915 S. Main St. Los Angeles, Calif. 90003
76545	Mueller Electric Co. 1583 E. 31st St. Cleveland, Ohio 44114
77764	Resistance Products Co. 914 S. 13th St. Harrisburgh, Pa. 17104
79727	Continental-Wirt Electronics Corp. Philadelphia, Pa.
80164	Keithley Instruments, Inc. 28775 Aurora Road Cleveland, Ohio 44139
80294	Bourns, Inc. 6135 Magnolia Ave. Riverside, Calif. 92506
81073	Grayhill, Inc. 561 Hillgrove Ave. La Grange, Ill. 60525
81483	International Rectifier Corp. 1523 East Grand Ave. El Segundo, Calif.
82389	Switchcraft, Inc. 5527 N. Elston Ave. Chicago, Ill. 60630
83125	General Instrument Corp. Capacitor Division Darlington, S.C. 29532
83330	Smith, Herman H., Inc. 812 Snediker Ave. Brooklyn, N.Y. 11207
83594	Burroughs Corp. Electronic Components Div. Plainfield, N.J. 07061
83701	Electronic Devices, Inc. Brooklyn, New York
84171	Arco Electronics, Inc. Community Drive Great Neck, N.Y. 11022
84411	TRW Capacitor Div. 112 W. First St. Ogallala, Nebr.
84970	Sarkes Tarzian, Inc. E. Hillside Dr. Bloomington, Ind.
86684	Radio Corp. of America Electronic Components & Devices Harrison, N.J.
87216	Philco Corp. Lansdale Div., Church Rd. Lansdale, Pa. 19446
90201	Mallory Capacitor 3029 East Washington Indianapolis, Ind. 46206
90303	Mallory Battery Co. Tarrytown, New York
91637	Dale Electronics, Inc. P.O. Box 609 Columbus, Nebr. 68601
91662	Elco Corp. Willow Grove, Pennsylvania
91737	Gremar Mfg. Co., Inc. 7 North Ave. Wakefield, Mass.
91802	Industrial Devices Inc. 982 River Rd. Edgewater, N.J. 07020
91929	Honeywell Inc. Micro Switch Div. Freeport, Ill. 61032
93332	Sylvania Electric Products, Inc. Semiconductor Products Div. Woburn, Mass.
93656	Electric Cord Co. 1275 Bloomfield Ave. Caldwell, N.J.
94144	Raytheon Co., Industrial Operation Components Div. Quincy, Mass.
94154	Tung-Sol Electric, Inc. Newark, New Jersey
94310	Tru-Ohm Products Memcor Components Div. Huntington, Ind. 46750
94696	Magnecraft Electric Co. 5579 North Lynch Chicago, Ill.
95348	Gordos Corp. 250 Glenwood Ave. Bloomfield, N.J. 07003
95712	Dage Electric Co., Inc. Hurricane Road Franklin, Ind.
97933	Raytheon Co. Components Div. Semiconductor Operation Mountain View, Calif.
99120	Plastic Capacitors, Inc. 2620 N. Clybourn Ave. Chicago, Ill.

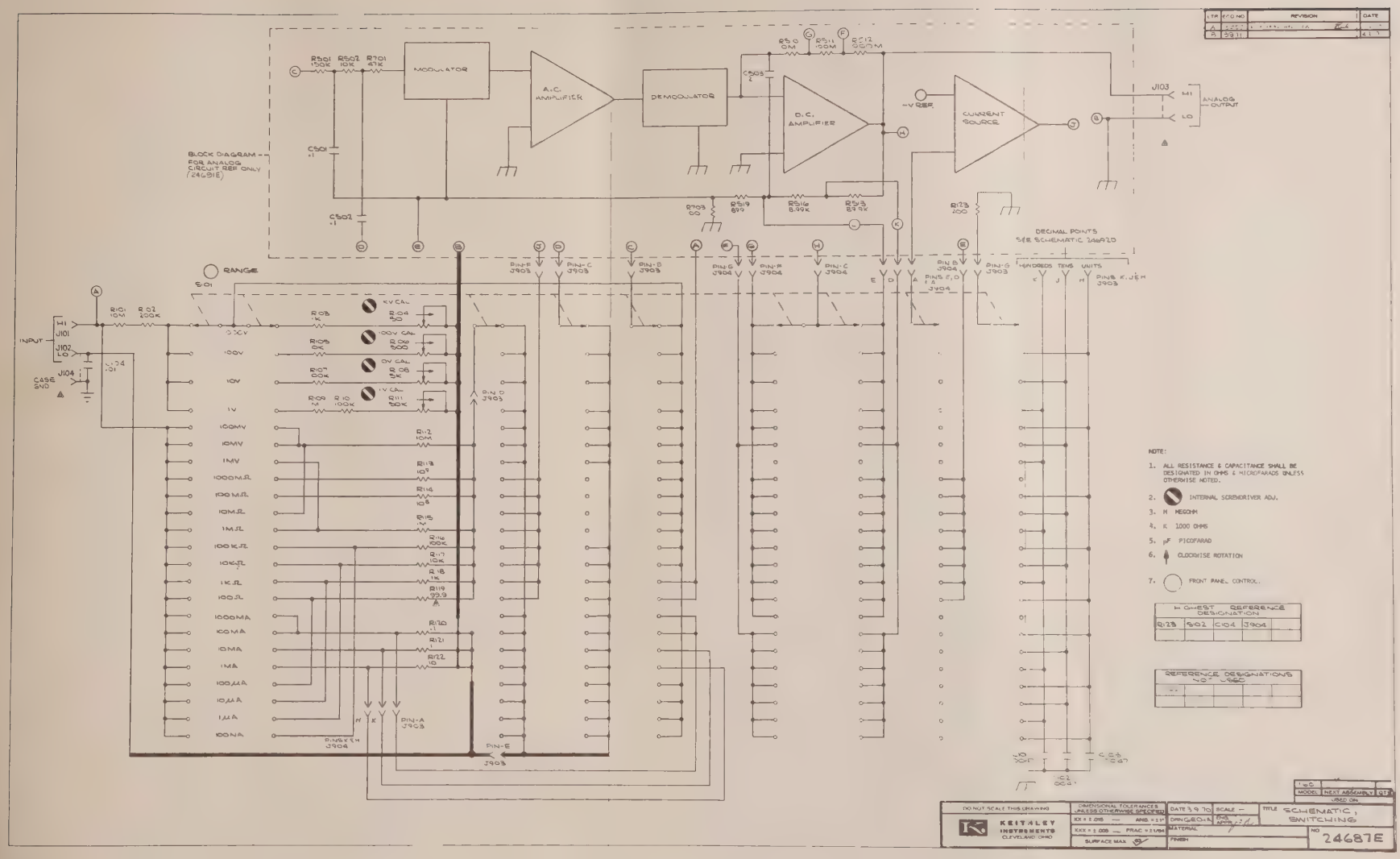

NOTE:

1. ALL RESISTANCE & CAPACITANCE SHALL BE DESIGNATED IN OHMS & MICROFARADS UNLESS OTHERWISE NOTED.
2. INTERNAL SCREWDRIVER ADJ.
3. M MEGOHM
4. K 1000 OHMS
5. pF PICOFARAD
6. CLOCKWISE ROTATION
7. FRONT PANEL CONTROL.

HIGHEST REFERENCE DESIGNATION			
R123	S102	C104	J904

REFERENCE DESIGNATIONS NOT USED			

LTR	ECO NO	REVISION	DATE
A	[illegible]	[illegible]	[illegible]
B	3911		[illegible]

DO NOT SCALE THIS DRAWING

KEITHLEY INSTRUMENTS CLEVELAND OHIO

DIMENSIONAL TOLERANCES UNLESS OTHERWISE SPECIFIED
XX = ± .015 — ANG = ±1°
XXX = ± .005 — FRAC = ±1/64
SURFACE MAX 63

DATE 3 9 70 SCALE —
DRN GEO H.S. APR 2 70
MATERIAL
FINISH

TITLE SCHEMATIC, SWITCHING

NO 24687E

ISO
MODEL NEXT ASSEMBLY QTY
USED ON

2. INTERNAL SCREWDRIVER ADJ.
3. M MEGOHM
4. K 1000 OHMS
5. pF PICOFARAD
6. CLOCKWISE ROTATION
7. FRONT PANEL CONTROL.
8. REAR PANEL ADJ.

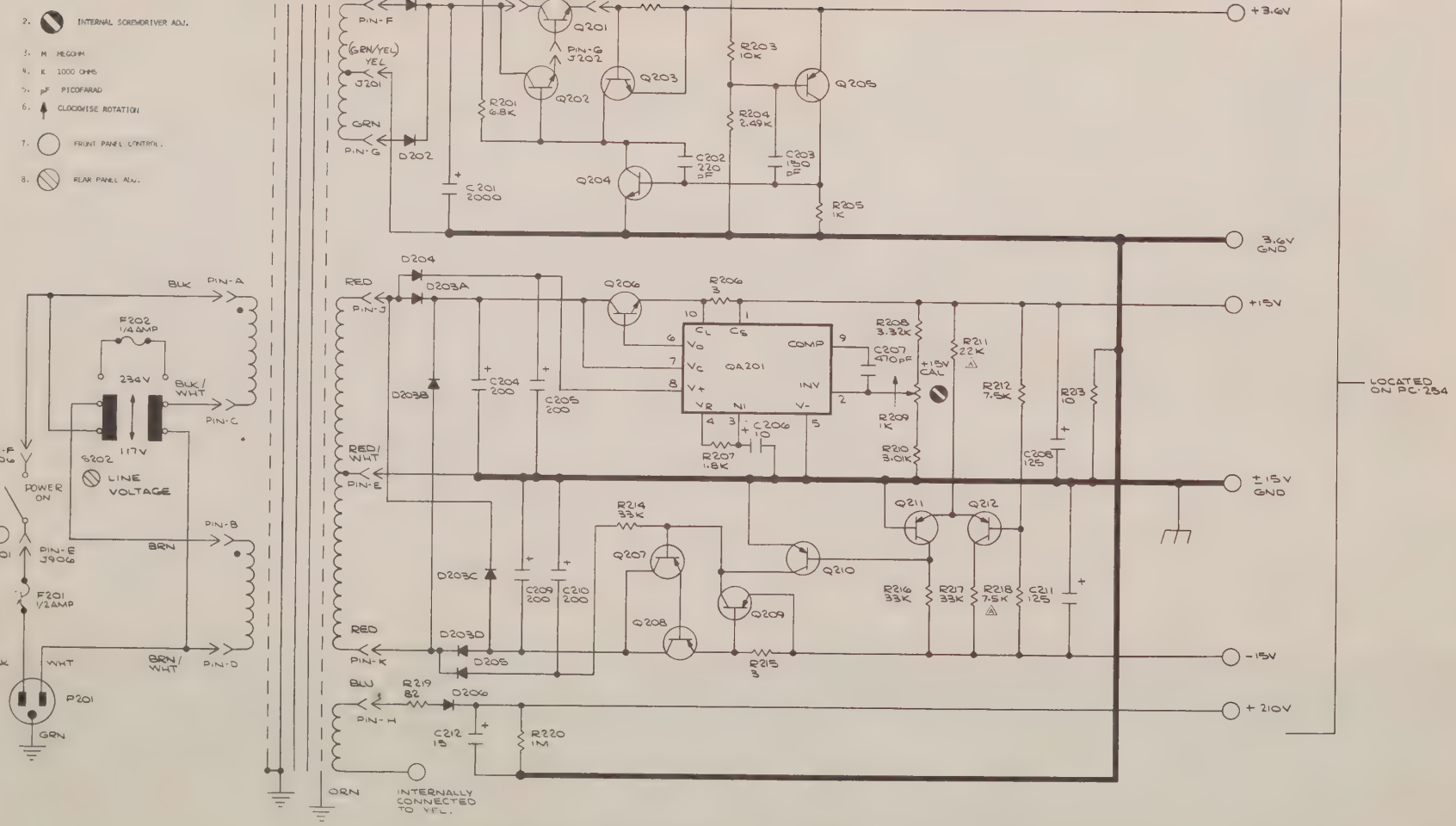

REFERENCE DESIGNATIONS NOT USED				

HIGHEST REFERENCE DESIGNATION				
R220	D206	F202	S202	C212
Q212	P201	QA201	J906	T101
J202				

163			1
160			1
MODEL	NEXT ASSEMBLY		QTY

DO NOT SCALE THIS DRAWING

KEITHLEY INSTRUMENTS CLEVELAND OHIO

DIMENSIONAL TOLERANCE UNLESS OTHERWISE SPECIFIED

DATE 3/13/70 DR. CHECKED FIN. APPR. MATERIAL FINISH

TITLE SCHEMATIC, POWER SUPPLY

NO. 24694D

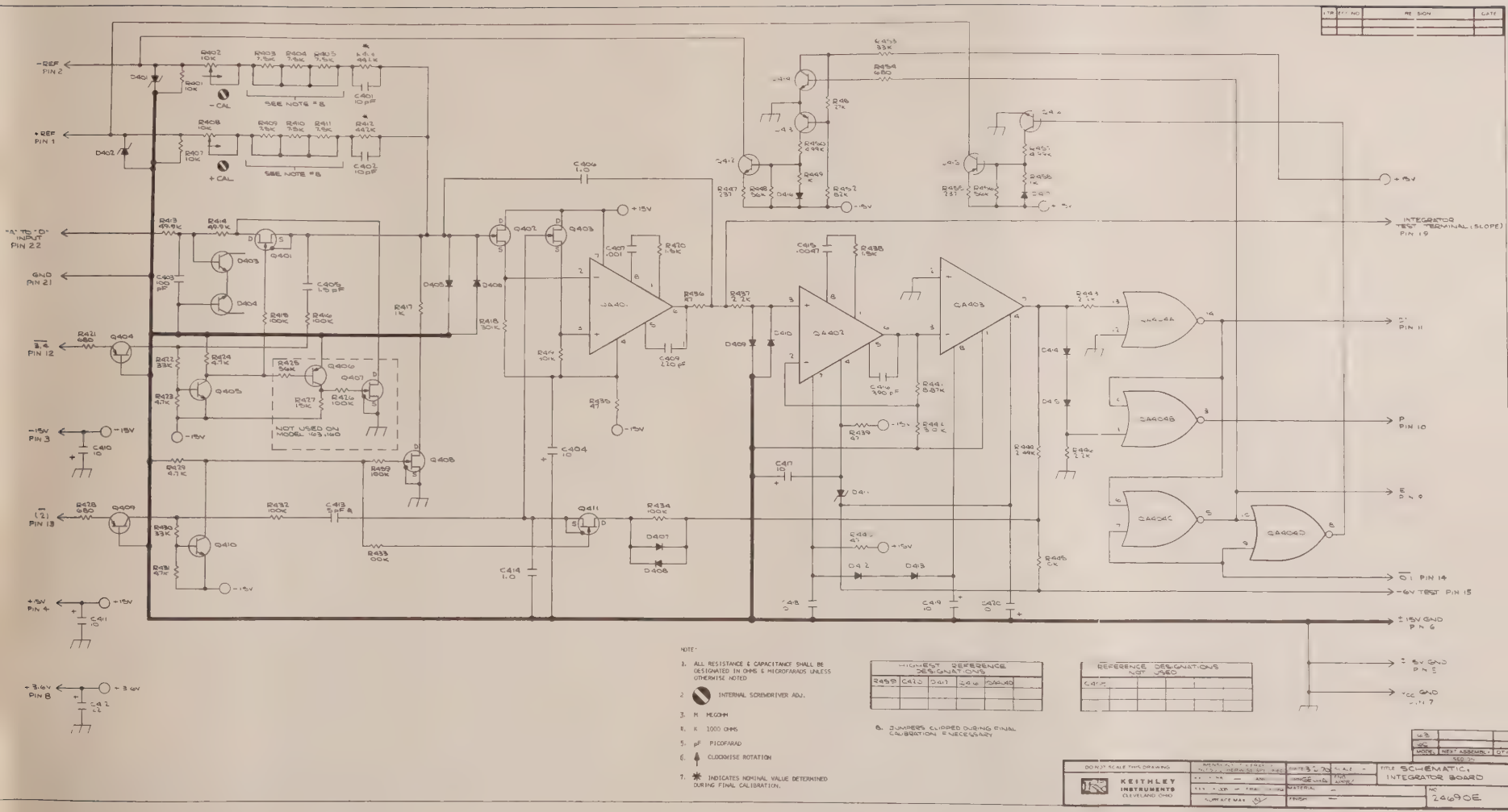

NOTE:

1. ALL RESISTANCE & CAPACITANCE SHALL BE DESIGNATED IN OHMS & MICROFARADS UNLESS OTHERWISE NOTED
2. INTERNAL SCREWDRIVER ADJ.
3. M MEGOHM
4. K 1000 OHMS
5. pF PICOFARAD
6. CLOCKWISE ROTATION
7. * INDICATES NOMINAL VALUE DETERMINED DURING FINAL CALIBRATION.

HIGHEST REFERENCE DESIGNATIONS				
R459	C420	D417	Q416	QA404D

REFERENCE DESIGNATIONS NOT USED				
C405				

8. JUMPERS CLIPPED DURING FINAL CALIBRATION IF NECESSARY

LTR	ECO NO	REVISION	DATE

63		
65		
MODEL	NEXT ASSEMBLY	QTY
SEQ DN		

DO NOT SCALE THIS DRAWING

KEITHLEY INSTRUMENTS CLEVELAND OHIO

DATE 3-2-70 SCALE — TITLE SCHEMATIC, INTEGRATOR BOARD

MATERIAL — FINISH —

NO 24690E

LTR	ECO NO	REVISION
A	3922	REMOVED DS501
B	3940	68K TO 47K, 68K TO 82K
C	3953	
D	3957	R739 - R.06K BECOMES NOMINAL VALUE

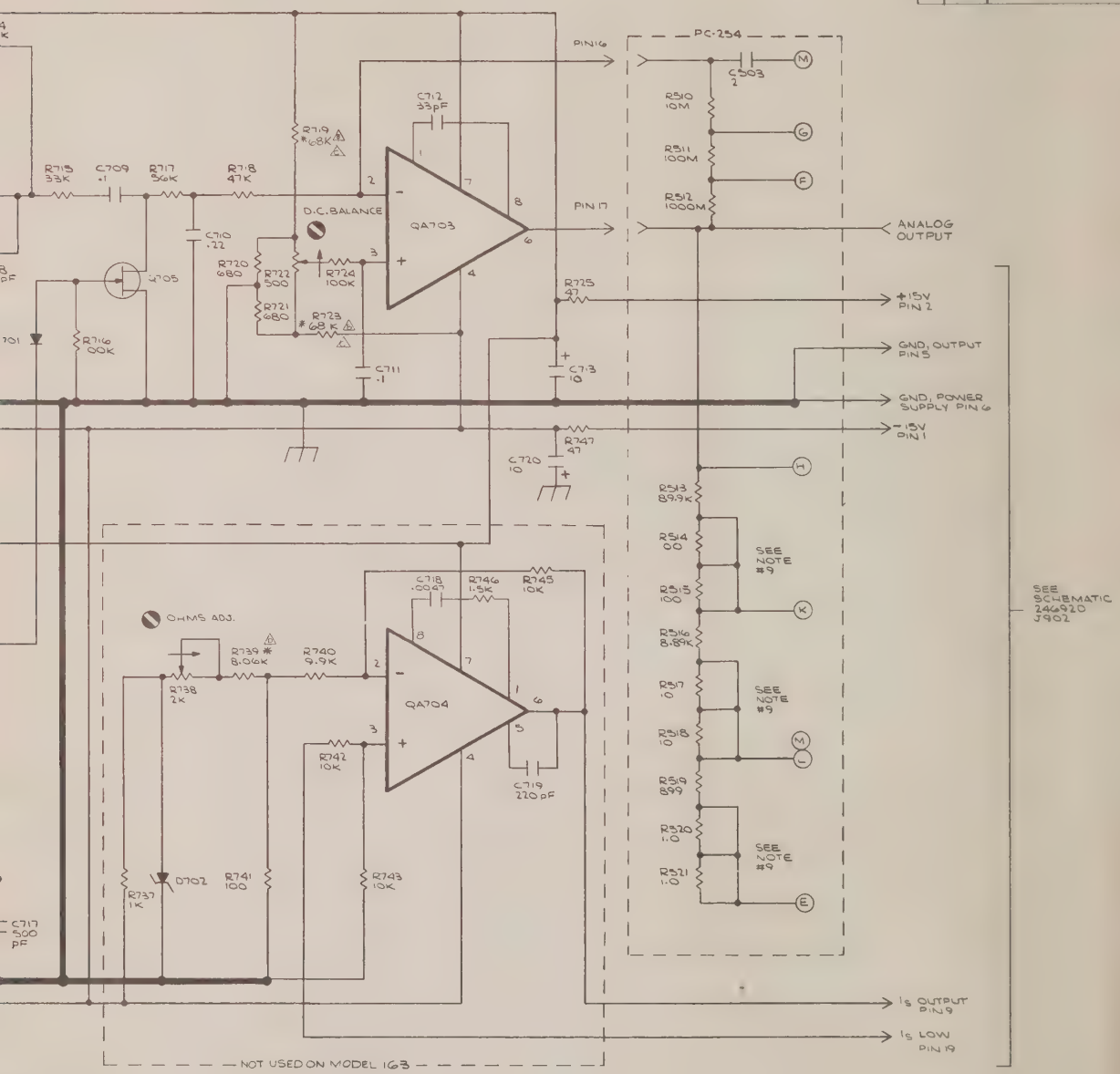

ONS	

163	
66	
MODEL	NE

DO NOT SCALE THIS DRAWING	DIMENSIONAL TOLERANCES UNLESS OTHERWISE SPECIFIED	DATE 6-19-70	SCALE	TITLE SCHEMATIC AMPLIFER PC-2
KEITHLEY INSTRUMENTS CLEVELAND OHIO	XX - ± .015 — ANG - ±	DRN GECHA	ENG APPR	
	XXX = ± .005 — FRAC = ±1/64	MATERIAL		NO 24
	SURFACE MAX 63	FINISH		

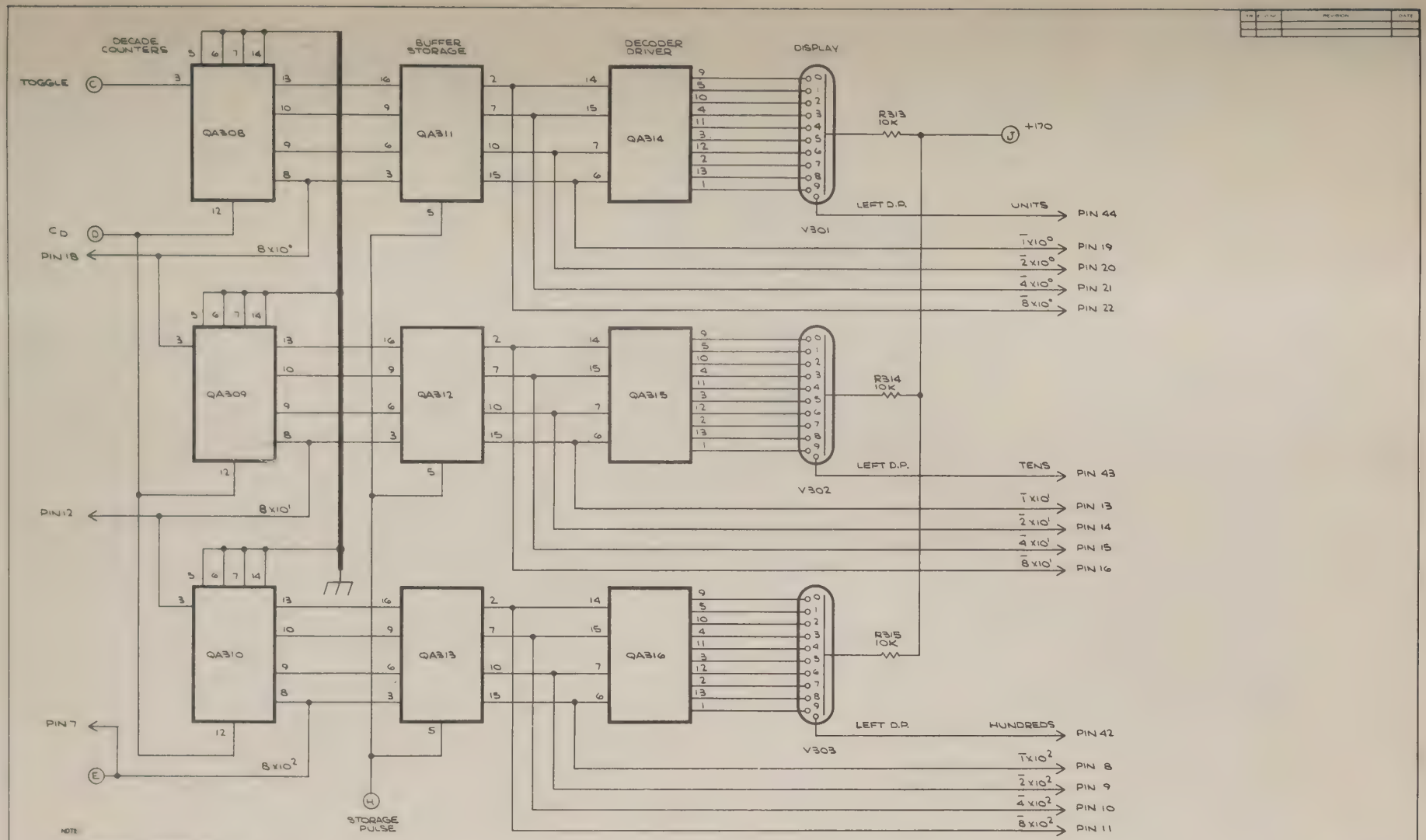

NOTE

1. ALL RESISTANCE & CAPACITANCE SHALL BE DESIGNATED IN OHMS & MICROFARADS UNLESS OTHERWISE NOTED
2. K 1000 OHMS

HIGHEST REFERENCE DESIGNATION					
R315	QA316	V303			

REFERENCE DESIGNATIONS NOT USED					

163			
160			
MODEL	NEXT ASSEMBLY	QTY	
USED ON			

DO NOT SCALE THIS DRAWING

KEITHLEY INSTRUMENTS CLEVELAND OHIO

DIMENSIONAL TOLERANCES UNLESS OTHERWISE SPECIFIED: XX ± .015 ANG ± 1°; XXX ± .005 FRAC ± 1/64; SURFACE MAX 63

DATE 5-4-70 SCALE

DRN GECH ENG APPR

MATERIAL

FINISH

TITLE SCHEMATIC, TUBE BOARD PC-248

NO 24689D

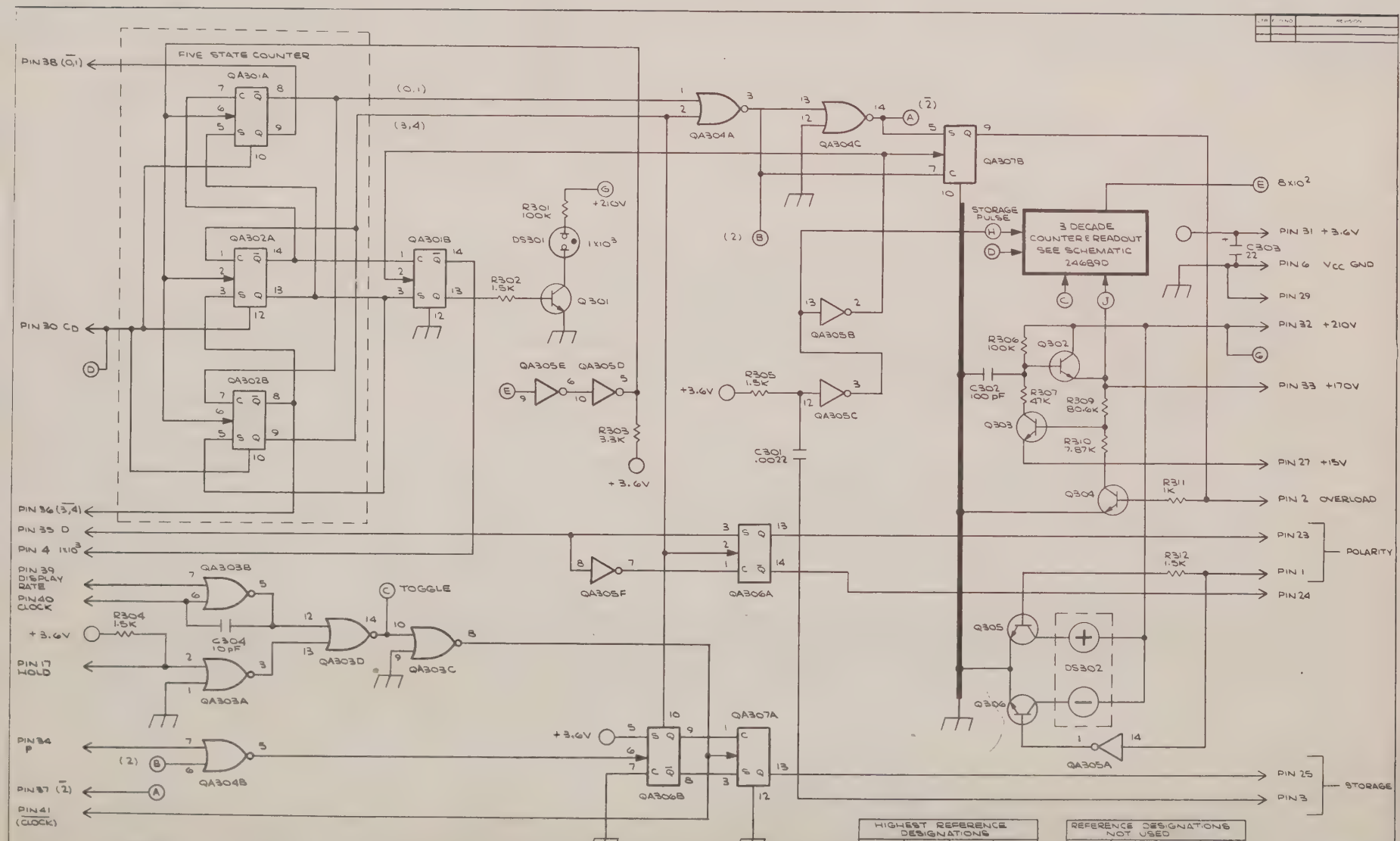
FIVE STATE COUNTER
PIN 38 (0,1)
QA301A
QA302A
QA302B
QA301B
PIN 30 CD
PIN 36 (3,4)
PIN 35 D
PIN 4 1x10³
PIN 39 DISPLAY RATE
PIN 40 CLOCK
PIN 17 HOLD
PIN 34 P
PIN 37 (2)
PIN 41 (CLOCK)
QA303A
QA303B
QA303C
QA303D
QA304A
QA304B
QA304C
QA305A
QA305B
QA305C
QA305D
QA305E
QA305F
QA306A
QA306B
QA307A
QA307B
R301 100K
DS301
1x10³
+21.0V
R302 1.5K
Q301
R303 3.3K
+3.6V
R304 1.5K
C304 10pF
TOGGLE
R305 1.5K
C301 .0022
STORAGE PULSE
3 DECADE COUNTER & READOUT SEE SCHEMATIC 24689D
8x10²
PIN 31 +3.6V
C303 22
PIN 6 Vcc GND
PIN 29
PIN 32 +21.0V
PIN 33 +17.0V
PIN 27 +15V
PIN 2 OVERLOAD
R306 100K
Q302
C302 100 pF
R307 47K
R309 80.6K
Q303
R310 7.87K
Q304
R311 1K
PIN 23
PIN 1
PIN 24
POLARITY
R312 1.5K
Q305
Q306
DS302
PIN 25
PIN 3
STORAGE
NOTES:
1. ALL RESISTANCE & CAPACITANCE SHALL BE DESIGNATED IN OHMS & MICROFARADS UNLESS OTHERWISE NOTED
2. M MEGOHM
3. K 1000 OHMS
4. pF PICOFARAD
HIGHEST REFERENCE DESIGNATIONS
R312 C304 Q306 DS302
QA307B
REFERENCE DESIGNATIONS NOT USED
R308
KEITHLEY INSTRUMENTS CLEVELAND OHIO
SCHEMATIC, TUBE BOARD PC-248
24688D

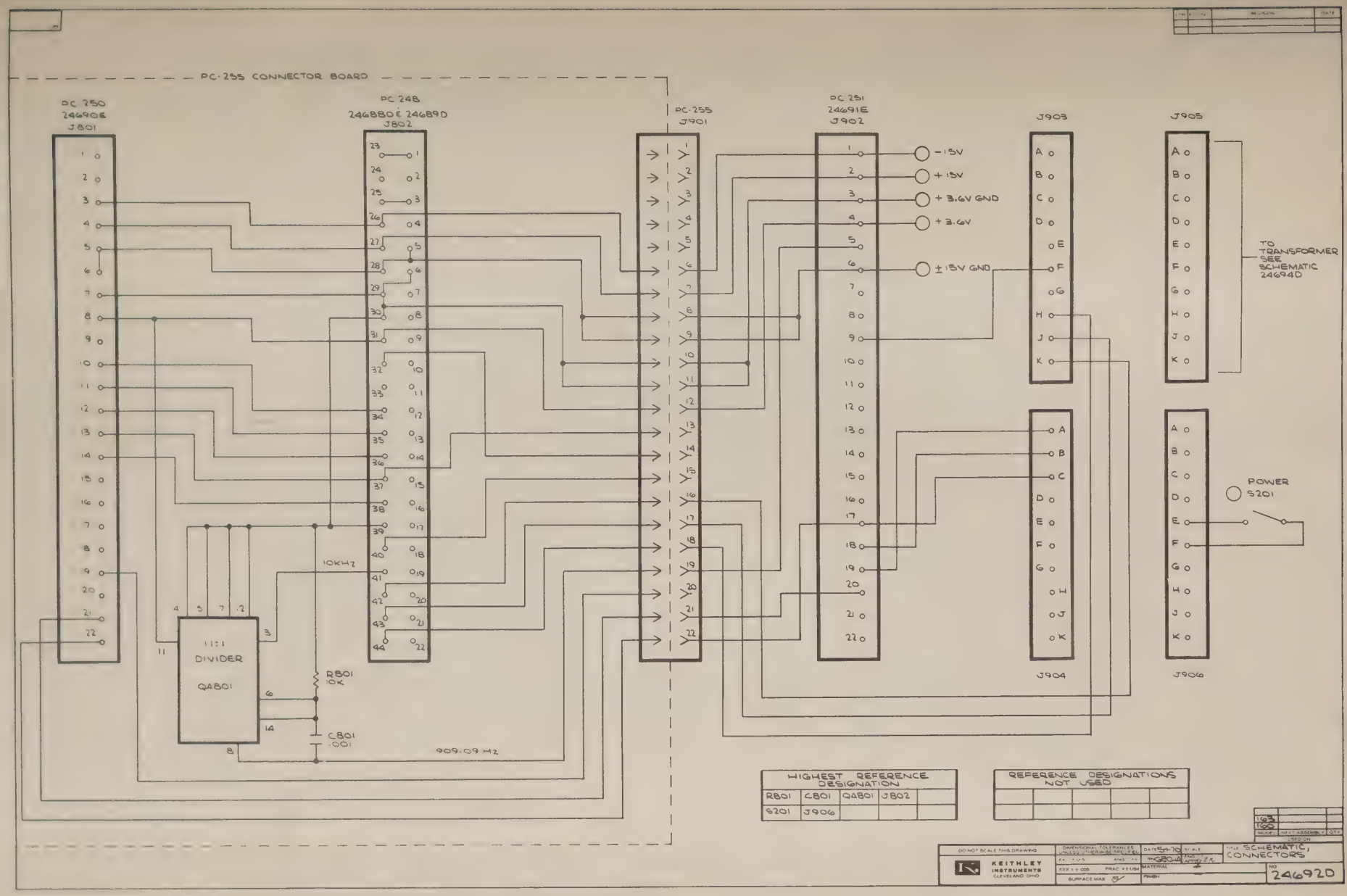
PC-255 CONNECTOR BOARD
PC 250
24690E
J801
PC 248
24688D & 24689D
J802
PC-255
J901
PC 251
24691E
J902
J903
J905
J904
J906
-15V
+15V
+3.6V GND
+3.6V
±15V GND
TO TRANSFORMER SEE SCHEMATIC 24694D
POWER
S201
10KHz
11:1
DIVIDER
QA801
R801
10K
C801
.001
909.09 Hz
HIGHEST REFERENCE DESIGNATION
R801 C801 QA801 J802
S201 J906
REFERENCE DESIGNATIONS NOT USED
DO NOT SCALE THIS DRAWING
KEITHLEY INSTRUMENTS CLEVELAND OHIO
DIMENSIONAL TOLERANCES UNLESS OTHERWISE SPECIFIED
SURFACE MAX
DATE 5-1-70
SCALE
MATERIAL
FINISH
TITLE SCHEMATIC, CONNECTORS
NO 24692D
163
160
MODEL
NEXT ASSEMBLY
QTY
REVISION
DATE

246690

A	[illegible]	ADDED POLE TO S101	5 20 70
B	[illegible]	CHG R103-[illegible] TO R103-1MEG	10 1 70

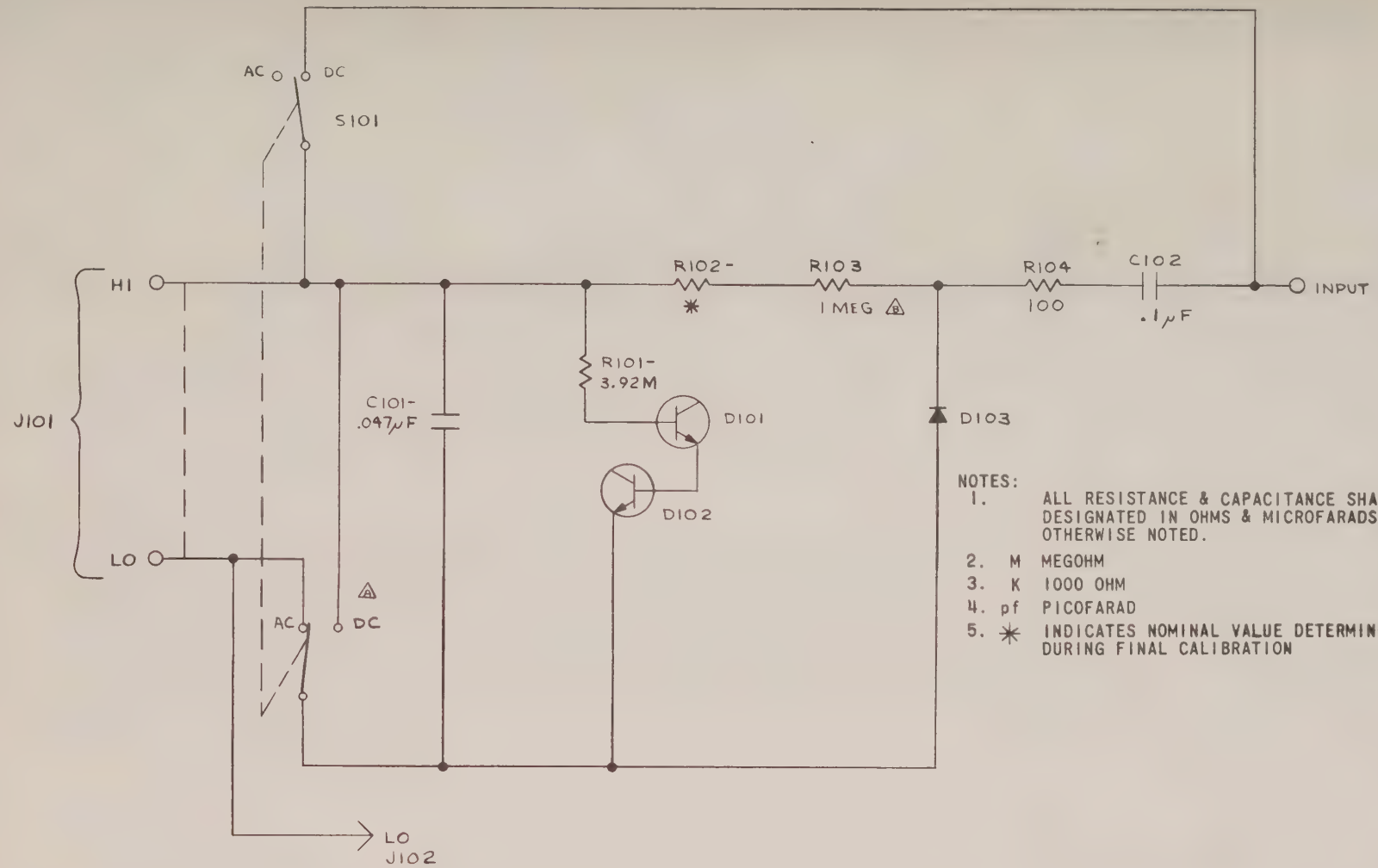

NOTES:

1. ALL RESISTANCE & CAPACITANCE SHALL BE DESIGNATED IN OHMS & MICROFARADS UNLESS OTHERWISE NOTED.
2. M MEGOHM
3. K 1000 OHM
4. pf PICOFARAD
5. ✱ INDICATES NOMINAL VALUE DETERMINED DURING FINAL CALIBRATION

REFERENCE DESIGNATIONS NOT USED				

HIGHEST REFERENCE DESIGNATION				
J102	S101	C102	R104	D103

MODEL	NEXT ASSEMBLY	QTY
1601		1

USED ON

DO NOT SCALE THIS DRAWING

KEITHLEY INSTRUMENTS CLEVELAND OHIO

DATE 5 11 70 | SCALE —

DR RGJ | ENG APPR

MATERIAL

FINISH

TITLE SCHEMATIC, AC-DC PROBE

NO. 246690

KEITHLEY INSTRUMENTS, INC.
REPAIR & CALIBRATION FORM

MODEL NO. _____
SERIAL NO. _____

DATE _____

R-

SHIP INSTRUMENT & FORM TO:

SALES SERVICE DEPT.
KEITHLEY INSTRUMENTS, INC.
28775 AURORA ROAD
CLEVELAND, OHIO 44139

FROM:

USER'S NAME _____
RETURN ADDRESS _____
_____
CITY _____
STATE _____ ZIP _____
TELEPHONE _____

1. REASON FOR RETURN. Check appropriate box.
   - ☐ Repair and Recalibration
   - ☐ Recalibration only. (If repairs are required to meet specifications, an additional repair charge will be added to recalibration cost.)

2. CALIBRATION REPORT. Specify report desired. (See reverse side of form for details.)
   - ☐ Calibration Report (Certified Traceable to N.B.S.)
   - ☐ Calibration Report (Production Calibration Equipment at the factory)
   - ☐ Certificate of Compliance

3. DESCRIPTION OF PROBLEM. (Include a block diagram of instruments connected in system. Recorder charts or other data would be helpful.)

_____
_____
_____
_____

Is problem constant or intermittent? _____

4. OPERATING CONDITIONS.
   Control setting (range, multiplier, etc.) _____
   Line voltage used _____ Line frequency used _____
   Temperature _____ °F Temperature variation ± _____ °F
   Humidity (high, medium, low) _____
   Other (please specify, such as line transients, etc.) _____

5. EQUIPMENT USED.
   Signal source _____ Source impedance _____
   Readout device _____ (Recorder, oscilloscope, etc.)
   Cables used _____ Length _____

6. ADDITIONAL INFORMATION. Please indicate any other pertinent information which may help the Keithley Repair and Calibration Department. (If repairs or modifications have been made to instrument by other than Keithley personnel, please specify below.)

_____
_____
_____

CALIBRATIONS AVAILABLE AT KEITHLEY INSTRUMENTS. EFFECTIVE: FEBRUARY 1, 1972

Listed and defined below are the four types of calibrations and their associated report formats which are presently available at Keithley Instruments. They fall into the following categories:

1. Report of Calibration Certified Traceable to the National Bureau of Standards
2. Calibration Report
3. Certificate of Compliance
4. Recalibration

All calibration and certification performed by Keithley Instruments is in accord with MIL-C-45662A.

Prices shown below are in addition to repair charges for any work necessary to place a customer's unit into first class condition prior to the calibration.

1. Report of Calibration Certified Traceable to the National Bureau of Standards.
This is a completely documented report, including all basic errors or deviations from nominal settings on appropriate ranges, terminals, dials, etc. Work is performed using the primary standards of the company with secondary transfers kept to a minimum. The NBS test numbers for the latest recalibration of the primary standards are furnished.

By definition, the above is performed in our Standards Laboratory so that random operator induced error is minimized and maximum protection to the equipment used is maintained.

This type of calibration is not recommended for instruments with a basic inaccuracy of 1% or greater. The precision involved in this report makes it uneconomical for such instruments. The Calibration Report listed below (No. 2) would be better suited in this case.

The Report of Calibration Certified Traceable to the National Bureau of Standards is available on the following instruments at the prices listed:

Model 140	$275	Model 5155-10^8	$ 50
Model 260	$225	Model 5155-10^9	$ 50
Model 261	$375	Model 5155-10^{10}	$ 50
Model 662	$275	Model 5155-10^{11}	$ 60
Model 5155 (Complete Set)	$295	Model 5155-10^{12}	$ 60
		Model 5155-10^{13}	$ 80

2. Calibration Report.
This report shows only the cardinal range, terminal, dial, etc. errors as determined by production calibration equipment and personnel. The production equipment is maintained traceable by transfer techniques against the primary standards maintained by the company. We attest to this fact and list basic deviations from nominal but the conditions of calibration are not as precisely controlled as the previous report nor are NBS test numbers supplied.

This report is available for any instrument in our line. The following price has been established for this report:

Model 261 . . . . . $ 60

Prices for other units can be estimated upon request.

3. Certificate of Compliance.
This is merely a restatement of the basic guarantee that the instrument was calibrated on equipment that is maintained by our standards personnel against primary standards. No report is issued.

This Certificate of Compliance is available at no charge for any instrument with the exception of the Model 261.

A newly purchased Model 261 or one returned for repair or recalibration is automatically supplied with a Calibration Report (as described in (2) above). The nature of this instrument makes it necessary to complete this report to ascertain specified accuracy. This Calibration Report is forwarded to the customer with the instrument. The $60 charge is incorporated as part of the normal calibration charge of the Model 261.

4. Recalibration.
This is a recalibration of the instrument according to our factory calibration procedures.

Model 260 . . . . . $ 90 (No report supplied. A Certificate of Compliance can be had at no charge if requested).

Model 261 . . . . . $ 60 (Calibration Report as described in (2) above is supplied. See (3) for explanation).

All other instruments are on a time and material basis for the particular unit involved.

All prices subject to change without prior notification.

www.manualsplus.com
1036101

KEITHLEY INSTRUMENTS, INC.

28775 AURORA ROAD • CLEVELAND, OHIO 44139 • (216) 248-0400
TELEX: 98-5469 • CABLE: KEITHLEY